HEATLOCK®

YOUR GLOBAL HOT-RUNNER SOLUTION

A1 EN

www.heatlock.com

HEATLOCK®

Global Hot Runner Solution Provider

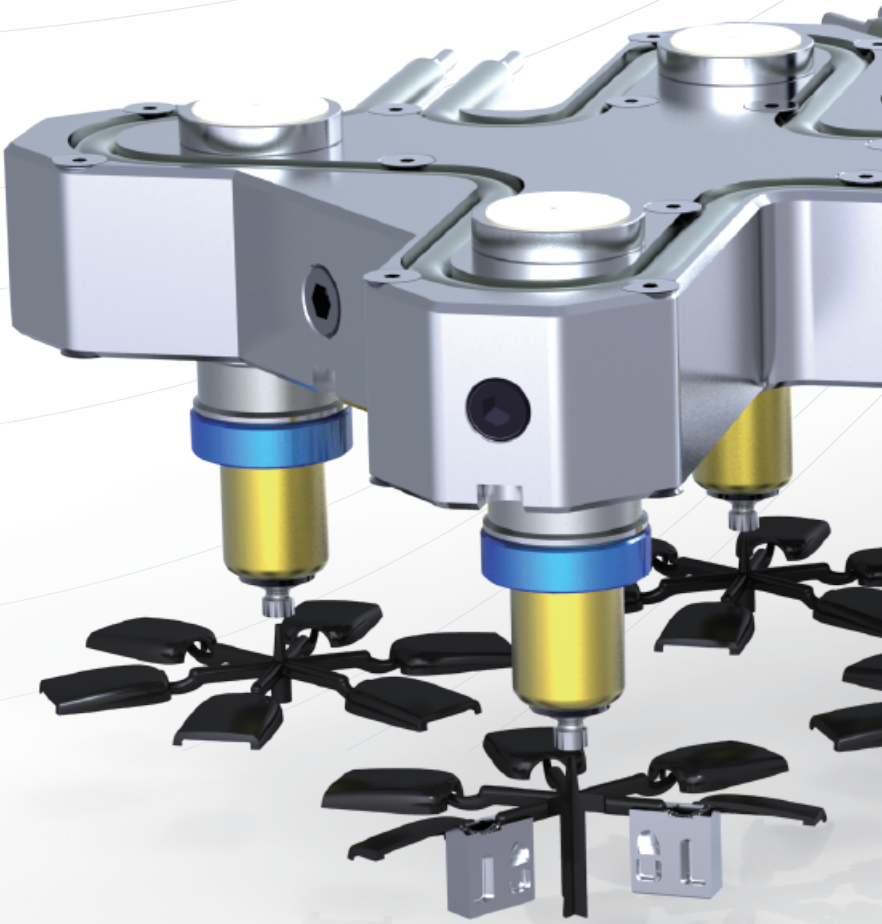

Our passion is hot runner solutions and we pride ourselves on simplicity whilst maintaining maximum performance, achieving modular perfection.
Our Operation is set up according to international business standards with strict quality and management system as key ingredients. We have more than 30 years' experience with Hot Runner Solutions.
We supply standardised products or special hot runner solutions, hot half's all up to your specific requirements. All simulated in depth, if needed, by our global partners. Our network has top of the line tech know-how.

Ceramic insulated, CE technology
HEATLOCK Hot Runners are known for their ceramic insulation, which insulates all the contact- and location-points from the mould. With our patented CE fix technology have we made ceramics even easier to use with increased sustainability

Service fanatics
Heatlock is a service company fanatic about customer care, we deliver hot runner solutions, your lean partner.

Global partners
Throughout our global network of partners, HEATLOCK guarantees high quality service no matter where your mould is produced or in production. You make your mould in China, Germany, Portugal, UK…….our Global Call service takes care of you.

Tech centre and spare part stock in;

China * Germany * US

GLOBAL ASSISTANCE, HELP ANYWHERE= GLOBAL CALL BY HEATLOCK

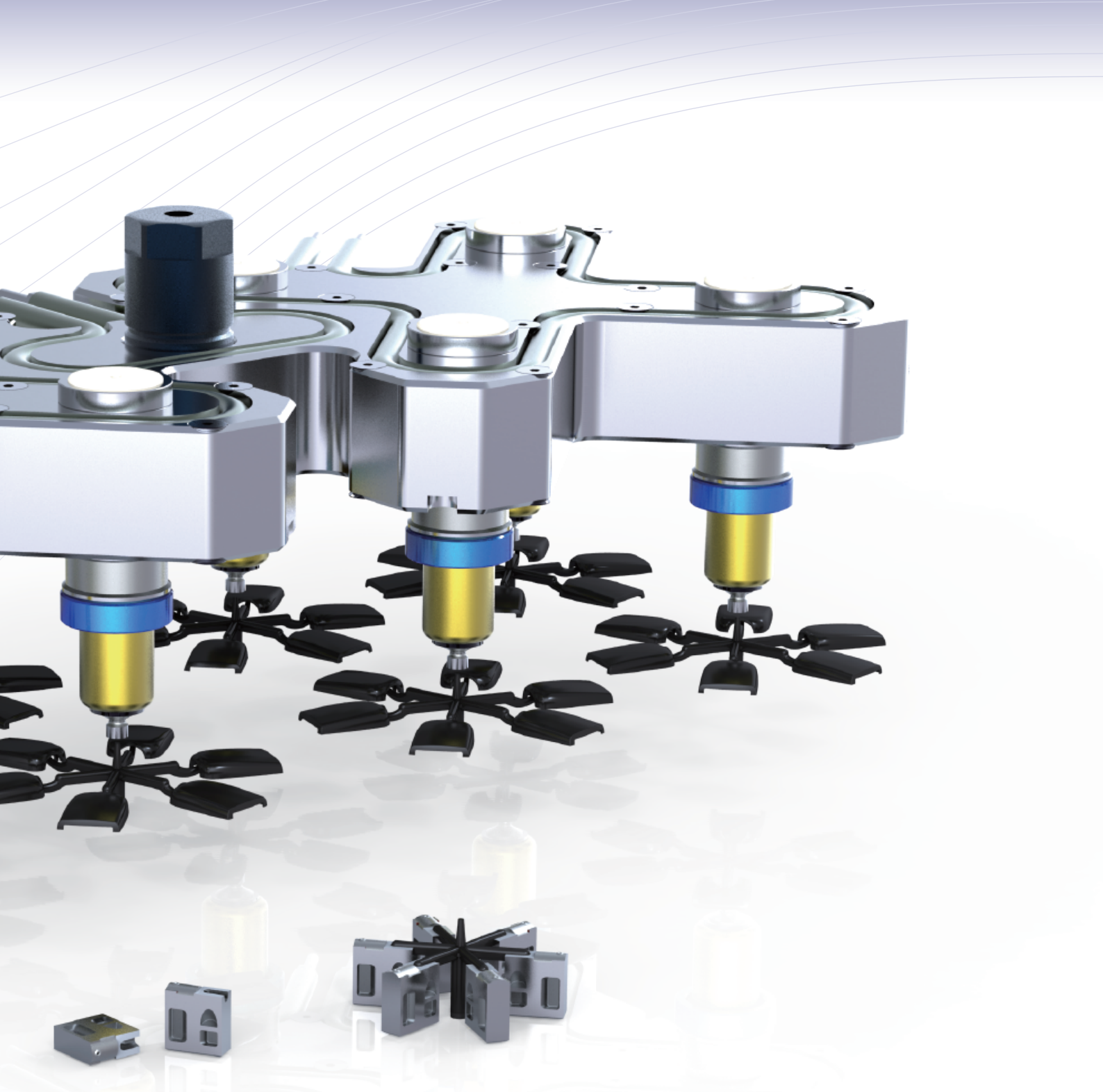

Standard hot runner series, floating manifold system, the work horse

· Price optimized hot runner solutions
· Ceramic insulated manifolds
· Optional ceramic insulated nozzles
· Special solutions or standard nozzle series
· Valve gate systems
· Multi tip nozzle

Individually design nozzle solutions to suit your production needs.

Nozzle Selection Guide/ Shot Weight

A1 Nozzle																	
*** Good ** Ok * Contact HEATLOCK -- Not recommended		EN1	EN2	EN3	EN4	TP1	TP2	TP3	TP4	TN1	TN2	TN3	TN4	VG1	VG2	VG3	VG4
Feed Channel (mm)		4	6	9	14	4	6	9	14	4	6	9	14	4	6	9	14
Low-viscosity PE, PS, PP		100	450	850	1800	100	450	850	1800	80	330	590	1600	80	390	700	1200
Medium-viscosity ABS, P A, POM, SAN		60	240	400	1200	60	240	400	1200	60	190	340	1000	60	130	300	550
High-viscosity		7	30	70	600	7	30	70	600	5	25	60	500	5	25	70	300
Low-viscosity	PP	***				***				***				***			
	PS/PE	***				***				***				***			
Medium-viscosity	ABS/SAN	***				***				***				***			
	POM	***				**				**				*			
	LCP	**				**				--				*			
	PBT	***				**				*				*			
	PET	**				*				*				*			
	P A6/P A6.6	*				*				*				*			
High-viscosity	PC/PMMA	***				***				**				***			
	PPO	***				***				*				*			
	PES/PEK	***				**				--				*			
	PPS/PEI	**				**				--				*			
L/M/H viscosity + additives	GF/CF/FR	***				**				*				*			

Viskosity: Low | Medium | High

*** Good ** Ok * Contact HEATLOCK -- Not recommented

All value above &approximate.For details regrading your product welcome to contact Heatlock.

→ A1 Gate diameter

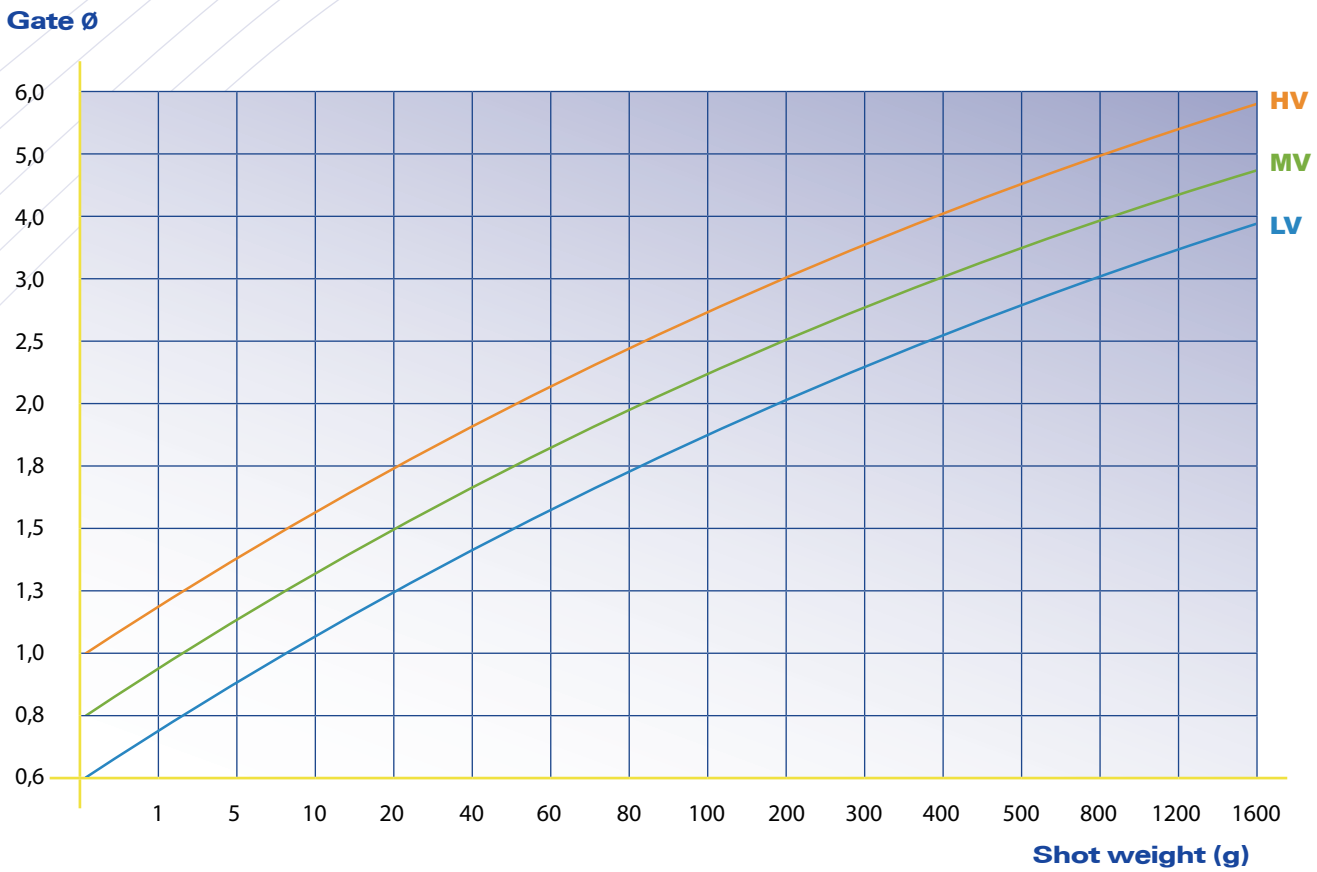

NOTE:
1. For "TP" type reduce gate Ø 30%
2. For filled materials increase gate Ø 20%

1. **LV** **Low viscosity** materials PS, PE, PP
2. **MV** **Medium viscosity** materials ABS, SAN, PA, POM
3. **HV** **High viscosity** materials PC, PMMA, PC/ABS, PUR

Above diagram is a guideline built on experience from thousands of applications. However is the result depending on numerous conditions in your mould; balance between shot weight, injection speed, injection pressure, mould temperature, temperature control around the gate area, temperature control opposite the gate.

A smaller gate freeze faster compared with a larger gate, a faster cycle time allow smaller gate, long cycle time requires bigger gate.

If cycle time is short and injection speed fast it may be necessary to design gate cooling to avoid gate to overheat.
When you gate on a runner is it recommended to make the gate slightly larger to reduce pressure drop and decrease shear rates. Runner shall be adjusted in size to suit Hot Runner moulding to get shortest cycle time.

Above diagram is a guideline only, final decision is to be decided by the moulder or simulation considering all factors of the process.

➔ A1 technology

A1-EN Series

- Easy to install, easy to use
- For direct gate or gate on runner, easy to control gate temperature
- Excellent heat separation between HR and mould
- Ceramic (size1) or Titanium insulation ring optional

A1-TP Series

- Easy to install, easy to use
- Fast gate cooling
- Suitable for direct gate or gate on runners
- For shot weights up to 1650 gram
- Ceramic (size1) or Titanium insulation ring optional

A1-TN Series

- Easy to install, easy to use
- Small residue
- For direct gate on the part
- For shot weights up to 1200 gram
- Ceramic (size1) or Titanium insulation ring optional

➔ A1 EN Series

- Easy to install, easy to use
- For direct gate or gate on runner, easy to control gate temperature
- Excellent heat separation between HR and mould
- Ceramic (size1) or Titanium insulation ring optional

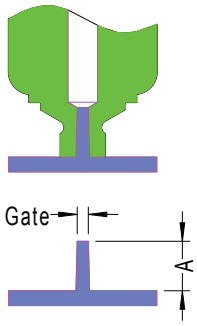

(mm)

Size	EN1	EN2	EN3	EN4
L	40~120	40~160	60~180	80~200
A	6.7	8	9	9
Φ Feed	4	6	9	14
Φ Gate	1.5~3	2~4	2~5	3~6

Shot Weight(g)				
Low-viscosity	100	450	850	1800
Medium-viscosity	60	240	400	1200
High-viscosity	7	30	70	600

→ A1 EN guide

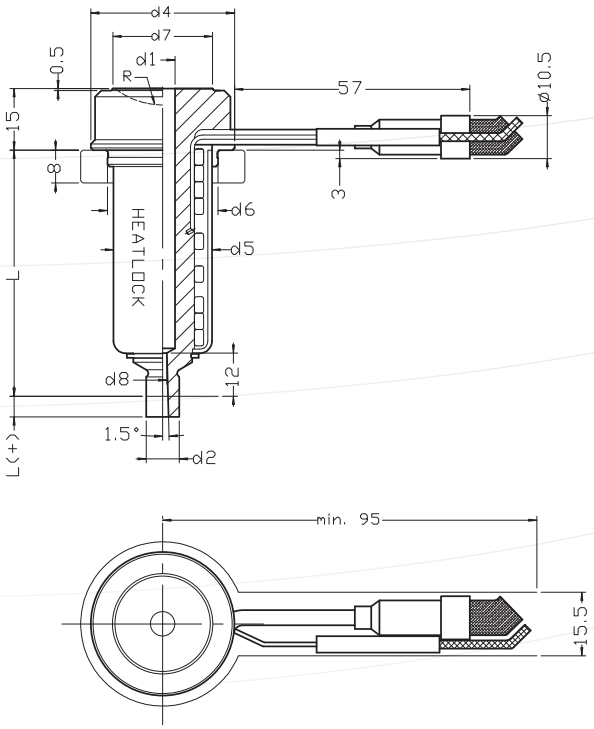
d4
d7
d1
R
0.5
15
8
57
ø10.5
3
d6
d5
HEATLOCK
L
d8
12
1.5°
d2
L(+)
min. 95
15.5

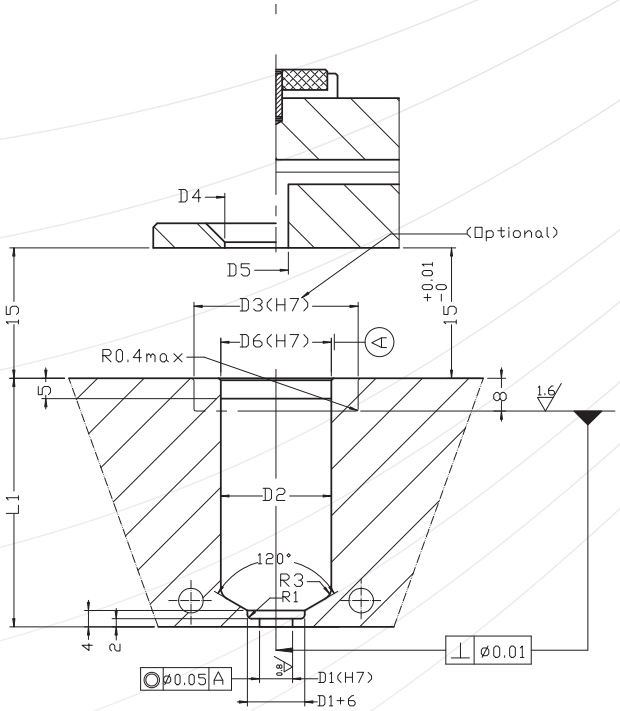
D4
(Optional)
D5
D3(H7)
D6(H7)
A
R0.4max
15
5
8
1.6
L1
D2
120°
R3
R1
4
2
ø0.05 A
D1(H7)
D1+6
ø0.01

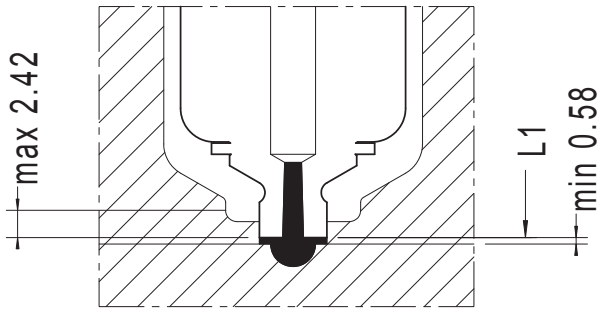
max 2.42
L1
min 0.58

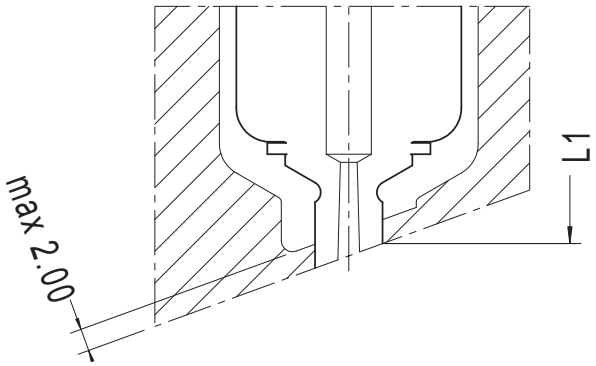
max 2.00
L1

➔ A1 EN Nozzle Dimension

(mm)

	Nozzle						Mould								Optional	
A1 EN	length	Exetended nozzle length	Feed			Gate	Mould dimension								Ceramic ring	Titanium ring
Size	**L**	**L(+)**	**d1**	**d4**	**d7**	**d8**	**L1**	**L2**	**D1**	**D2**	**D3**	**D4**	**D5**	**D6**	**D1**	**D2**
A1EN1040	40	5	4	29	18	1.5	40.58	6.7	6	23	C30 T30	20	6	23	KEM03002308	TIM03002308
A1EN1050	50						50.60									
A1EN1060	60						60.61									
A1EN1080	80						80.65									
A1EN1100	100						100.69									
A1EN1120	120						120.73									
A1EN2040	40	5	6	35	24.5	2	40.58	8	8	27	T36 T40 T50	26.5	6	27	–	TIM03602708 TIM05002708 TIM04002708
A1EN2060	60						60.61									
A1EN2080	80						80.65									
A1EN2100	100						100.69									
A1EN2120	120						120.73									
A1EN2140	140						140.77									
A1EN2160	160						160.80									
A1EN3060	60	10	9	48	32	2	60.61	9	12	39	T50	34	9	39	–	TIM05003908
A1EN3080	80						80.65									
A1EN3100	100						100.69									
A1EN3120	120						120.73									
A1EN3140	140						140.77									
A1EN3160	160						160.80									
A1EN3180	180						180.84									
A1EN4080	80	20	14	52	34.5	3	80.65	9	16	44	T54	36.5	14	44	–	TIM05404408
A1EN4100	100						100.69									
A1EN4120	120						120.73									
A1EN4140	140						140.77									
A1EN4160	160						160.80									
A1EN4180	180						180.84									
A1EN4200	200						200.88									

→ A1 EN Nozzle Spare Parts

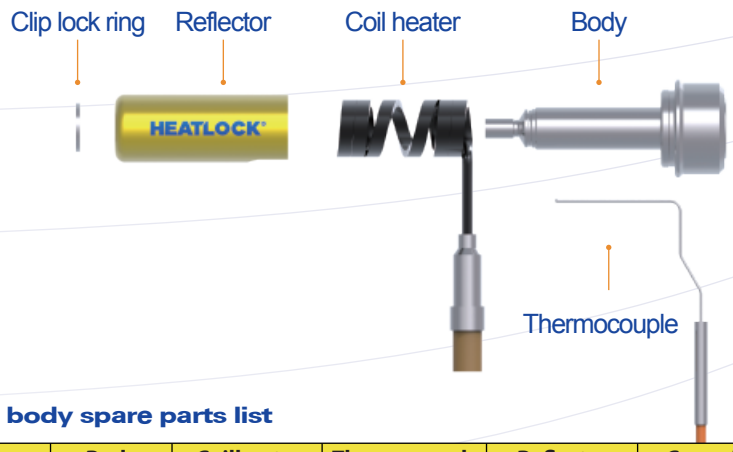

Nozzle body spare parts list

Nozzle type	Body	Coilheater	Thermocouple	Reflector	Ceramic	Titanium
A1EN1	A1EN1040	CS14120330200	TC00140195	RFT120120-040	KEM03002308	TIM03002308
	A1EN1050	CS14120430200	TC00140195	RFT120120-050		
	A1EN1060	CS14120530225	TC00140200	RFT120120-060		
	A1EN1080	CS14120730250	TC00140210	RFT120120-080		
	A1EN1100	CS14120930350	TC00140210	RFT120120-100		
	A1EN1120	CS14121130350	TC00140220	RFT120120-120		
A1EN2	A1EN2040	CS14150310260	TC00140195	RFT224200-040	–	TIM03602708 TIM04002708 TIM05002708
	A1EN2060	CS14150510300	TC00140200	RFT224200-060		
	A1EN2080	CS14150710350	TC00140210	RFT224200-080		
	A1EN2100	CS14150910450	TC00140210	RFT224200-100		
	A1EN2120	CS14151110450	TC00140220	RFT224200-120		
	A1EN2140	CS14151310500	TC00140220	RFT224200-140		
	A1EN2160	CS14151510550	TC00140230	RFT224200-160		
A1EN3	A1EN3060	CS14210490400	TC00140200	RFT334200-060	–	TIM05003908
	A1EN3080	CS14210690450	TC00140210	RFT334200-080		
	A1EN3100	CS14210890500	TC00140210	RFT334200-100		
	A1EN3120	CS14211090600	TC00140220	RFT334200-120		
	A1EN3140	CS14211290650	TC00140220	RFT334200-140		
	A1EN3160	CS14211490700	TC00140220	RFT334200-160		
	A1EN3180	CS14211690750	TC00140230	RFT334200-180		
A1EN4	A1EN4080	CS01280680600	TC00140210	RFT438200-080	–	TIM05404408
	A1EN4100	CS01280880700	TC00140210	RFT438200-100		
	A1EN4120	CS01281080750	TC00140220	RFT438200-120		
	A1EN4140	CS01281280800	TC00140220	RFT438200-140		
	A1EN4160	CS01281480850	TC00140230	RFT438200-160		
	A1EN4180	CS01281680900	TC00140230	RFT438200-180		
	A1EN4200	CS01281880950	TC00140250	RFT438200-200		

Power	White(2X)	Power
	Yellow/Green	Earth
Thermocouple	Blue	Minus[-]
	Red	Positive[+]

➔ A1 TP Series

- Easy to install, easy to use
- Fast gate cooling
- Suitable for direct gate or gate on runners
- For shot weights up to 1650 gram
- Ceramic (size1) or Titanium insulation ring optional

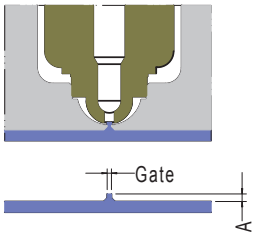

(mm)

Size	TP1	TP2	TP3	TP4
L	40~120	40~160	60~180	80~200
A	1-2	1-3	1.5-4	2-5
Φ Feed	4	6	9	14
Φ Gate	0.6-3	0.8-4	1.2-5	1.8-6

Shot Weight(g)				
Low-viscosity	100	450	850	1800
Medium-viscosity	60	240	400	1200
High-viscosity	7	30	70	600

→ A1 TP guide

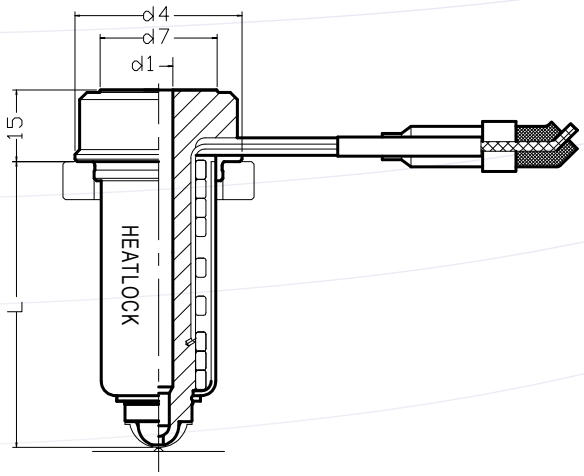
d4
d7
d1
15
L
HEATLOCK

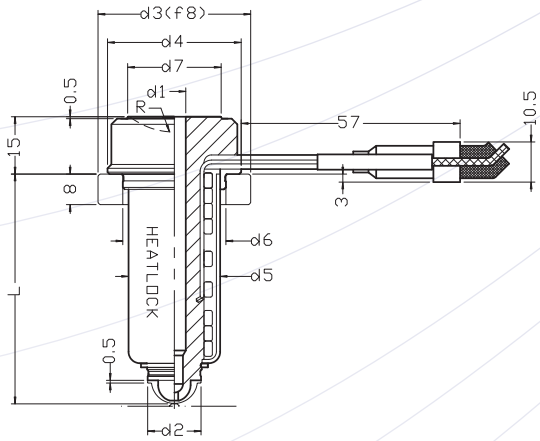
d3(f8)
d4
d7
d1
R
0.5
15
8
57
10.5
3
d6
d5
L
HEATLOCK
0.5
d2

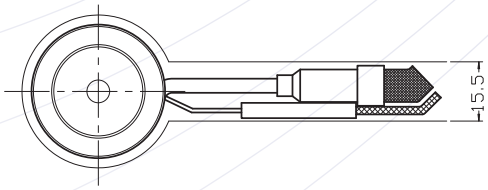
15.5

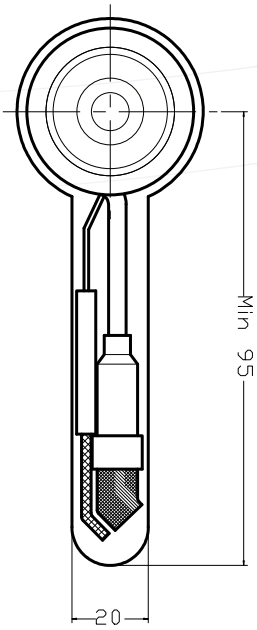
Min 95
20

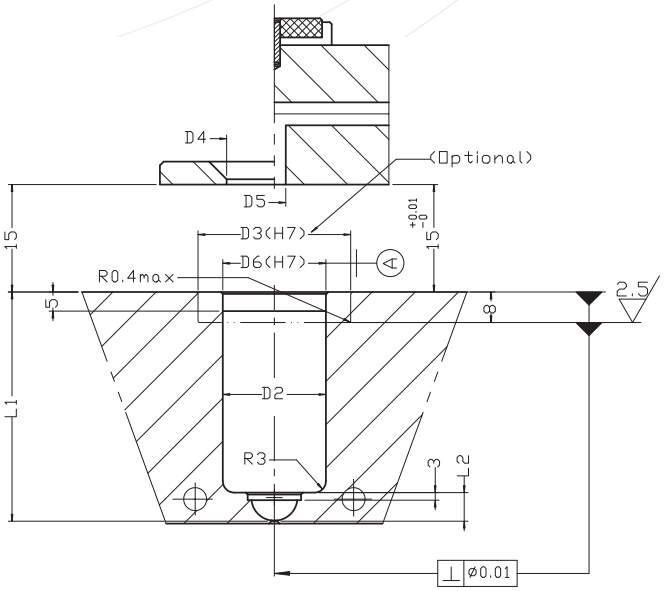
D4
(Optional)
D5
15
D3(H7)
+0.01
-0
15
D6(H7)
A
R0.4max
5
8
2.5
D2
L1
R3
3
L2
⊥ ø0.01

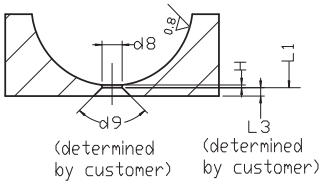
d8
0.8
H
L1
d9
L3
(determined
by customer)
(determined
by customer)

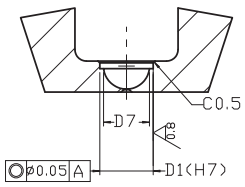
C0.5
D7
0.8
ø0.05 A
D1(H7)

➔ A1 TP Nozzle Dimension

(mm)

	Nozzle				Mould											Optional	
A1 TP	length	Feed				Mould dimension									Gate	Ceramic ring	Titanium ring
Size	**L**	**d1**	**d4**	**d7**	**H**	**L1**	**L2**	**D1**	**D2**	**D3**	**D4**	**D5**	**D6**	**D7**	**d8**		
A1TP1040	40	4	29	18	0.2	40.11	6.5	11	23	C30 T30	20	6	23	9	≥0.6	KEM03002308	TIM03002308
A1TP1050	50					50.13											
A1TP1060	60					60.15											
A1TP1080	80					80.19											
A1TP1100	100					100.23											
A1TP1120	120					120.26											
A1TP2040	40	6	35	24.5	0.2.	40.08	8	14	27	T36 T40 T50	26.5	6	27	12	≥0.8	–	TIM03602708 TIM04002708 TIM05002708
A1TP2060	60					60.16											
A1TP2080	80					80.2											
A1TP2100	100					100.24											
A1TP2120	120					120.28											
A1TP2140	140					140.31											
A1TP2160	160					160.35											
A1TP3060	60	9	48	32	0.3	60.17	9.5	19	39	T50	34	9	39	16.5	≥1.2	–	TIM05003908
A1TP3080	80					80.21											
A1TP3100	100					100.25											
A1TP3120	120					120.29											
A1TP3140	140					140.32											
A1TP3160	160					160.36											
A1TP3180	180					180.4											
A1TP4080	80	14	52	34.5	0.4	80.21	10.5	25	44	T54	36.5	14	44	22.5	≥1.8	–	TIM05404408
A1TP4100	100					100.25											
A1TP4120	120					120.29											
A1TP4140	140					140.33											
A1TP4160	160					160.37											
A1TP4180	180					180.4											
A1TP4200	200					200.44											

D3:C=Ceramic T=Titaninm

→ A1 TP Nozzle Spare Parts

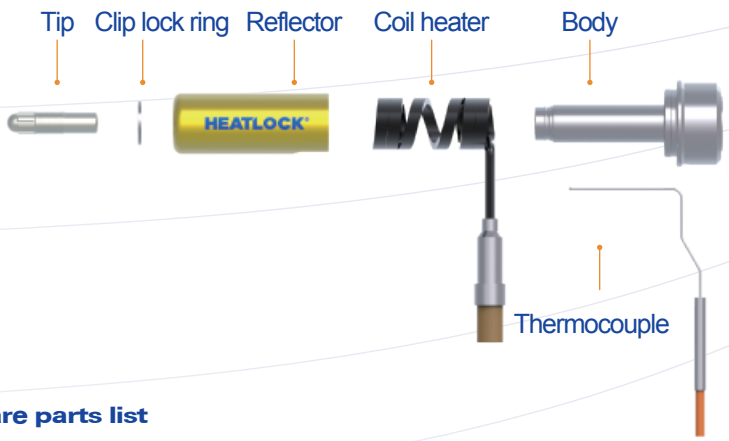

Nozzle body spare parts list

Nozzle type	Body	Coilheater	Thermocouple	Tip	Reflector	Ceramic	Titanium
A1TP1	A1BD104011	CS14120330200	TC00140195	A1TP129151	RFT120120-040	KEM03002308	TIM03002308
	A1BD105011	CS14120430200	TC00140200		RFT120120-050		
	A1BD106011	CS14120530225	TC00140210		RFT120120-060		
	A1BD108011	CS14120730250	TC00140220		RFT120120-080		
	A1BD110011	CS14120930350	TC00140220		RFT120120-100		
	A1BD112011	CS14121130350	TC00140250		RFT120120-120		
A1TP2	A1BD204014	CS14150310260	TC00140195	A1TP240201 A1TP240001	RFT224200-040	–	TIM03602708 TIM04002708 TIM05002708
	A1BD206014	CS14150510300	TC00140200		RFT224200-060		
	A1BD208014	CS14150710350	TC00140210		RFT224200-080		
	A1BD210014	CS14150910450	TC00140220		RFT224200-100		
	A1BD212014	CS14151110450	TC00140230		RFT224200-120		
	A1BD214014	CS14151310500	TC00140250		RFT224200-140		
	A1BD216014	CS14151510550	TC00140250		RFT224200-160		
A1TP3	A1BD306019	CS14210490400	TC00140200	A1TP348251	RFT334200-060	–	TIM05003908
	A1BD308019	CS14210690450	TC00140210		RFT334200-080		
	A1BD310019	CS14210890500	TC00140220		RFT334200-100		
	A1BD312019	CS14211090600	TC00140230		RFT334200-120		
	A1BD314019	CS14211290650	TC00140250		RFT334200-140		
	A1BD316019	CS14211490700	TC00140250		RFT334200-160		
	A1BD318019	CS14211690750	TC00140270		RFT334200-180		
A1TP4	A1BD408025	CS01280680600	TC00140210	A1TP451301	RFT438200-080	–	TIM05404408
	A1BD410025	CS01280880700	TC00140220		RFT438200-100		
	A1BD412025	CS01281080750	TC00140230		RFT438200-120		
	A1BD414025	CS01281280800	TC00140250		RFT438200-140		
	A1BD416025	CS01281480850	TC00140250		RFT438200-160		
	A1BD418025	CS01281680900	TC00140270		RFT438200-180		
	A1BD420025	CS01281880950	TC00140270		RFT438200-200		

Power	White(2X)	Power
	Yellow/Green	Earth
Thermocouple	Blue	Minus[-]
	Red	Positive[+]

➔ A1 TN Series

- Easy to install, easy to use
- Small residue
- For direct gate on the part
- For shot weights up to 1200 gram
- Ceramic (size1) or Titanium insulation ring optional

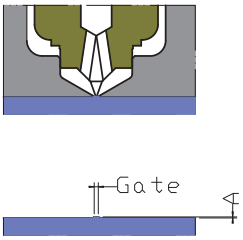

(mm)

Size	TN1	TN2	TN3	TN4
L	40~120	40~160	60~180	80~200
A	0.2-0.5	0.2-1	0.3-1	0.4-1.5
Φ Feed	4	6	9	14
Φ Gate	0.6-2	0.8-3	1.2-3	1.8-5

Shot Weight(g)				
Low-viscosity	80	330	590	1600
Medium-viscosity	60	190	340	1000
High-viscosity	5	25	60	500

→ A1 TN guide

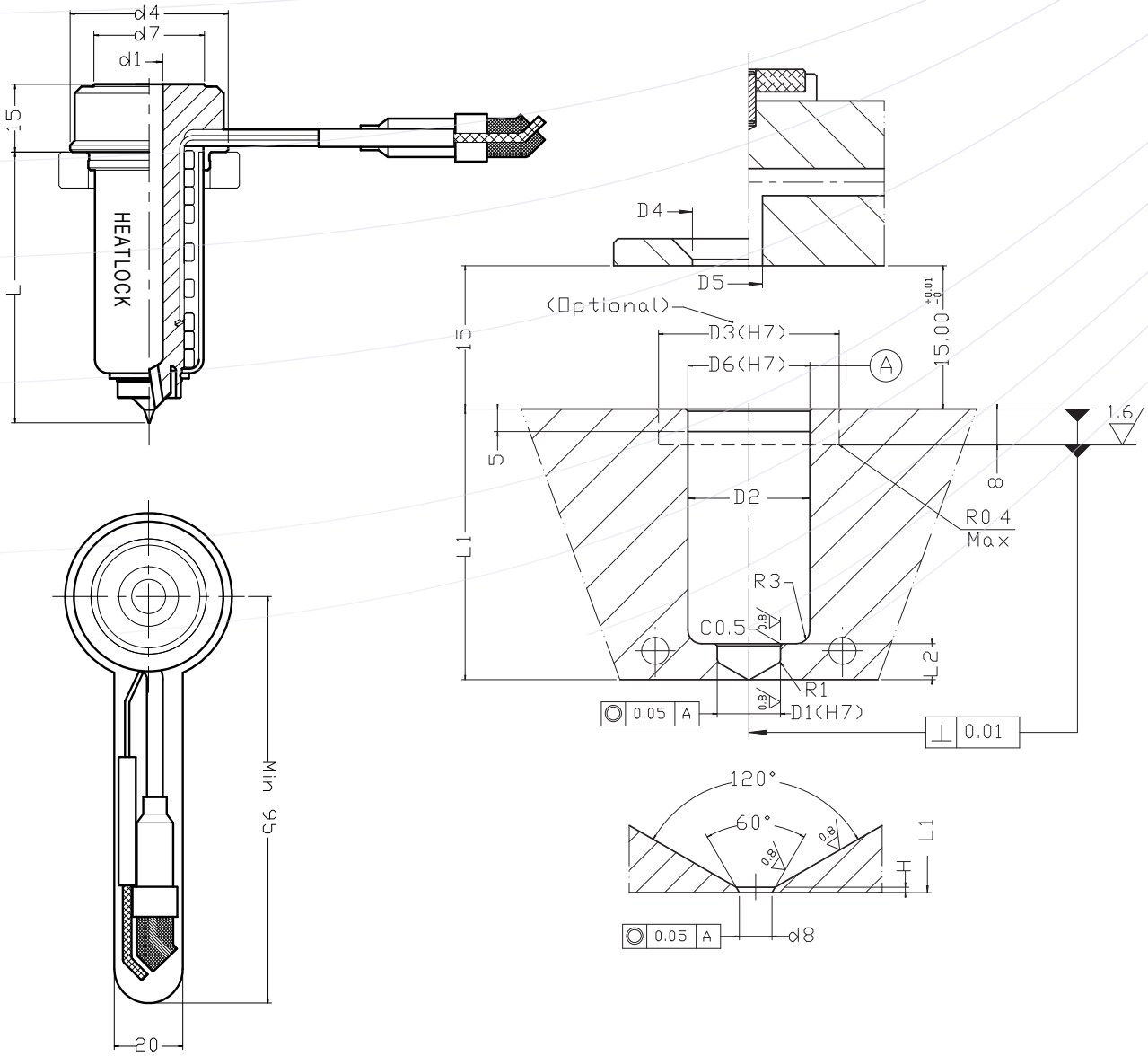
d4
d7
d1
15
L
HEATLOCK
D4
D5
(Optional)
D3(H7)
D6(H7)
A
15
15.00 +0.01 -0
1.6
5
8
D2
R0.4
Max
L1
R3
C0.5
0.8
L2
R1
0.05 A
D1(H7)
0.01
Min 95
20
120°
60°
0.8
L1
H
0.05 A
d8

➔ A1 TN Nozzle Dimension

(mm)

A1 TN	Nozzle				Mould										Optional	
	length	Feed				Mould dimension								Gate	Ceramic ring	Titanium ring
Size	**L**	**d1**	**d4**	**d7**	**H**	**L1**	**L2**	**D1**	**D2**	**D3**	**D4**	**D5**	**D6**	**d8**		
A1TN1040	40	4	29	18	0.2	40.11	6.5	11	23	C30 T30	20	6	23	≥0.6	KEM03002308	TIM03002308
A1TN1050	50					50.13										
A1TN1060	60					60.15										
A1TN1080	80					80.19										
A1TN1100	100					100.23										
A1TN1120	120					120.26										
A1TN2040	40	6	35	24.5	0.2	40.08	8	14	27	T36 T40 T50	26.5	6	27	≥0.8	–	TIM03602708 TIM04002708 TIM05002708
A1TN2060	60					60.16										
A1TN2080	80					80.2										
A1TN2100	100					100.24										
A1TN2120	120					120.28										
A1TN2140	140					140.31										
A1TN2160	160					160.35										
A1TN3060	60	9	48	32	0.3	60.17	9.5	19	39	T50	34	9	39	≥1.2	–	TIM05003908
A1TN3080	80					80.21										
A1TN3100	100					100.25										
A1TN3120	120					120.29										
A1TN3140	140					140.32										
A1TN3160	160					160.36										
A1TN3180	180					180.4										
A1TN4080	80	14	52	34.5	0.4	80.21	10.5	25	44	T54	36.5	14	44	≥1.8	–	TIM05404408
A1TN4100	100					100.25										
A1TN4120	120					120.29										
A1TN4140	140					140.33										
A1TN4160	160					160.37										
A1TN4180	180					180.4										
A1TN4200	200					200.44										

D3:C=Ceramic; T=Titanium

→ A1 TN Nozzle Spare Parts

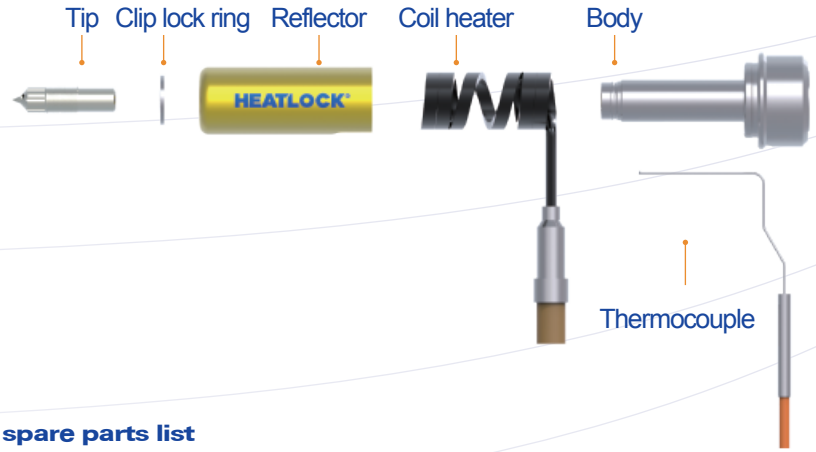

Nozzle body spare parts list

Nozzle type	Body	Coilheater	Thermocouple	Tip	Reflector	Ceramic	Titanium
A1TN1	A1BD104011	CS14120330200	TC00140195	A1TN130151 A1TN130153 A1TN130221	RFT1201200-040	KEM03002308	TIM03002308
	A1BD105011	CS14120430200	TC00140200		RFT1201200-050		
	A1BD106011	CS14120530225	TC00140210		RFT1201200-060		
	A1BD108011	CS14120730250	TC00140220		RFT1201200-080		
	A1BD110011	CS14120930350	TC00140220		RFT1201200-100		
	A1BD112011	CS14121130350	TC00140250		RFT1201200-120		
A1TN2	A1BD204014	CS14150310260	TC00140195	A1TN241201 A1TN241203 A1TN241301	RFT224200-040	–	TIM03602708 TIM04002708 TIM05002708
	A1BD206014	CS14150510300	TC00140200		RFT224200-060		
	A1BD208014	CS14150710350	TC00140210		RFT224200-080		
	A1BD210014	CS14150910450	TC00140220		RFT224200-100		
	A1BD212014	CS14151110450	TC00140230		RFT224200-120		
	A1BD214014	CS14151310500	TC00140250		RFT224200-140		
	A1BD216014	CS14151510550	TC00140250		RFT224200-160		
A1TN3	A1BD306019	CS14210490400	TC00140200	A1TN349301 A1TN349303 A1TN349431	RFT334200-060	–	TIM05003908
	A1BD308019	CS14210690450	TC00140210		RFT334200-080		
	A1BD310019	CS14210890500	TC00140220		RFT334200-100		
	A1BD312019	CS14211090600	TC00140230		RFT334200-120		
	A1BD314019	CS14211290650	TC00140250		RFT334200-140		
	A1BD316019	CS14211490700	TC00140250		RFT334200-160		
	A1BD318019	CS14211690750	TC00140270		RFT334200-180		
A1TN4	A1BD408025	CS01280680600	TC00140210	A1TN452451 A1TN452453 A1TN452601	RFT438200-080	–	TIM05404408
	A1BD410025	CS01280880700	TC00140220		RFT438200-100		
	A1BD412025	CS01281080750	TC00140230		RFT438200-120		
	A1BD414025	CS01281280800	TC00140250		RFT438200-140		
	A1BD416025	CS01281480850	TC00140250		RFT438200-160		
	A1BD418025	CS01281680900	TC00140270		RFT438200-180		
	A1BD420025	CS01281880950	TC00140270		RFT438200-200		

TN tip spare part list

1 exit	3 exit	
copper	copper	HBM-CDC
A1TN130221	A1TN130151	A1TN130153
A1TN241301	A1TN241201	A1TN241203
A1TN349431	A1TN349301	A1TN349303
A1TN452601	A1TN452451	A1TN452453

Power	White(2X)	Power
	Yellow/Green	Earth
Thermocouple	Blue	Minus[-]
	Red	Positive[+]

➔ A1 VG Series

- Pneumatic valve gate system
- No residue on part
- Gate diameter 0.8 to 5mm
- Ceramic (size1) or Titanium insulation ring optional

(mm)

Size	VG1	VG2	VG3	VG4
L	40~120	40~160	60~180	80~200
Φ Feed	4	6	9	14
Φ Gate	≧0.8	≧1.0	≧1.5	≧2.5

Shot Weight(g)				
Low-viscosity	80	390	700	1200
Medium-viscosity	60	130	300	550
High-viscosity	5	25	70	300

→ A1 VG guide

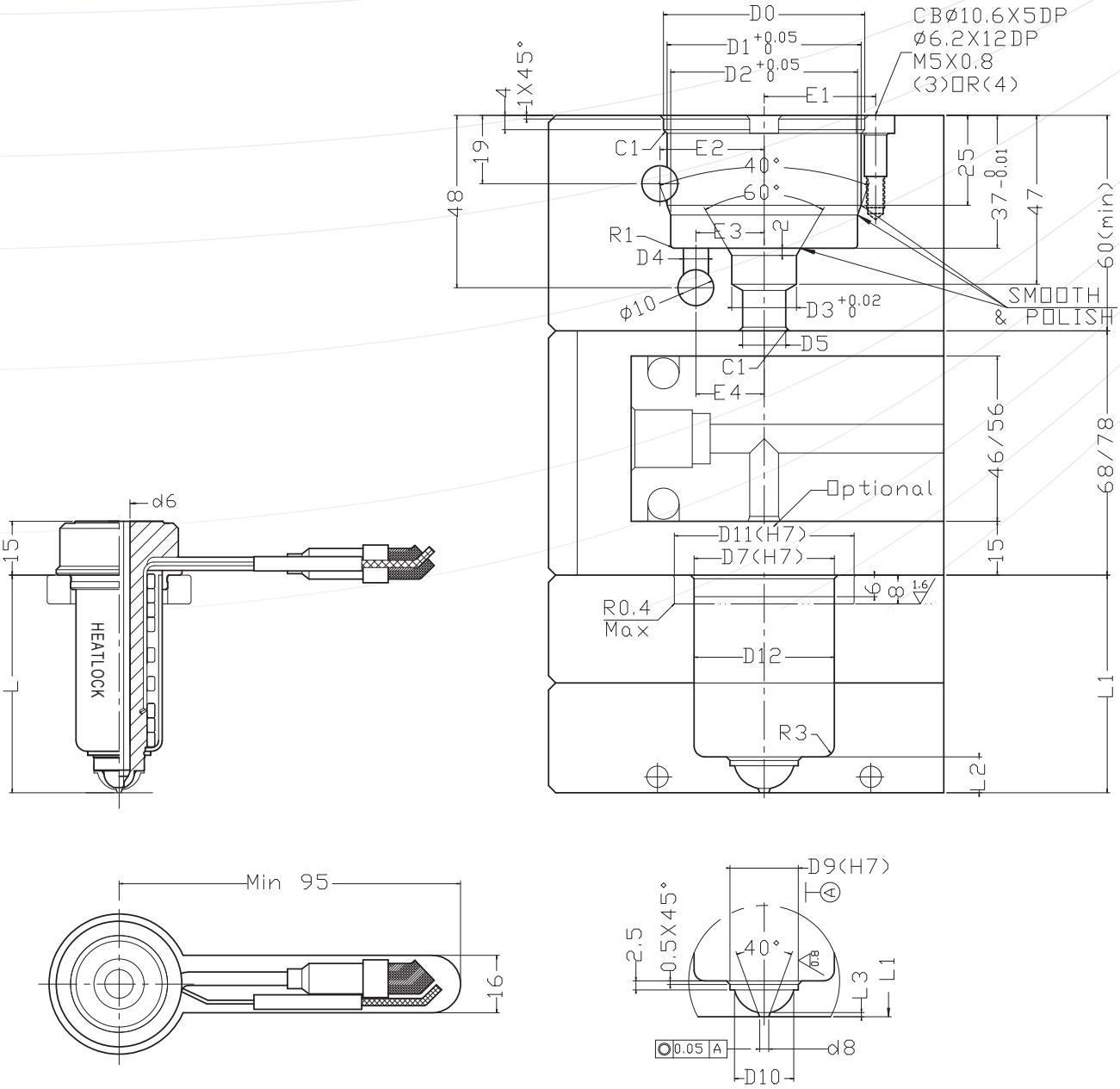
D0
D1 +0.05 0
D2 +0.05 0
E1
CBØ10.6X5DP
Ø6.2X12DP
M5X0.8
(3)□R(4)
4
1X45°
19
48
C1
E2
40°
60°
R1
E3
2
D4
Ø10
D3 +0.02 0
D5
C1
E4
25
37 -0.01
47
60(min)
SMOOTH
& POLISH
46/56
68/78
Optional
D11(H7)
D7(H7)
15
6
8
1.6
R0.4
Max
D12
R3
L1
2
d6
15
L
HEATLOCK
Min 95
16
D9(H7)
A
2.5
0.5X45°
40°
0.8
L3
L1
0.05 A
d8
D10

➔ A1 VG Nozzle Dimension

(mm)

	Nozzle			Mould									Optional	
A1 VG	length		Feed	Mould Dimension				Gate					Ceramic ring	Titanium ring
Size	**L**	**d4**	**d6**	**L1**	**L2**	**L3**	**D7**	**d8**	**D9**	**D10**	**D11**	**D12**		
A1VG1040	40	29	4	40.11	6.5	0.8	23	≥0.8	11	9	C30 T50 T30	23	KEM03002308	TIM03002308
A1VG1050	50			50.13										
A1VG1060	60			60.15										
A1VG1080	80			80.19										
A1VG1100	100			100.20										
A1VG1120	120			120.30										
A1VG2040	40	35	6	40.08	8	0.8	27	≥1.0	14	12	T36 T40 T50	27	–	TIM03602708 TIM04002708 TIM05002708
A1VG2060	60			60.16										
A1VG2080	80			80.20										
A1VG2100	100			100.20										
A1VG2120	120			120.3										
A1VG2140	140			140.30										
A1VG2160	160			160.40										
A1VG3060	60	48	9	60.17	10	1.2	39	≥1.5	19	16.5	T50	39	–	TIM05003908
A1VG3080	80			80.21										
A1VG3100	100			100.30										
A1VG3120	120			120.3										
A1VG3140	140			140.30										
A1VG3160	160			160.40										
A1VG3180	180			180.40										
A1VG4080	80	52	14	80.21	10.5	1.2	44	≥2.5	25	22.5	T54	44	–	TIM05404408
A1VG4100	100			100.30										
A1VG4120	120			120.30										
A1VG4140	140			140.30										
A1VG4160	160			160.40										
A1VG4180	180			180.40										
A1VG4200	200			200.40										

D3:C=Ceramic; T=Titanium

→ A1 VG Nozzle Spare Parts

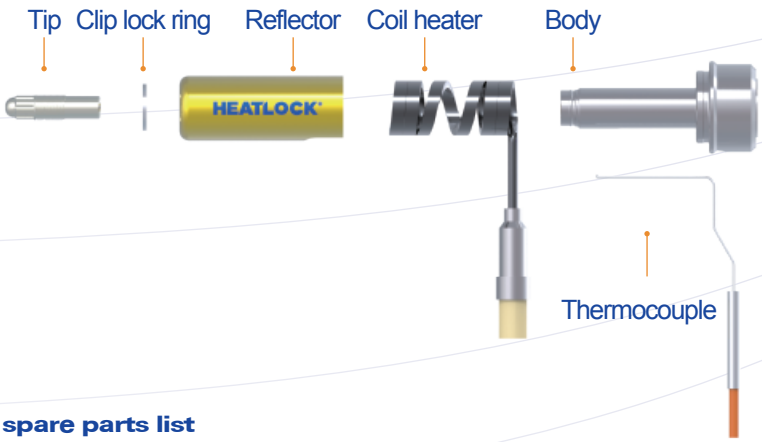

Nozzle body spare parts list

Nozzle type	Body	Coilheater	Thermocouple	Tip	Reflector	Ceramic	Titanium
A1VG1	A1BD104011	CS14120330200	TC00140195	A1TV128171 A1TV128173	RFT1201200-040	KEM03002308	TIM03002308
	A1BD105011	CS14120430200	TC00140200		RFT1201200-050		
	A1BD106011	CS14120530225	TC00140210		RFT1201200-060		
	A1BD108011	CS14120730250	TC00140220		RFT1201200-080		
	A1BD110011	CS14120930350	TC00140220		RFT1201200-100		
	A1BD112011	CS14121130350	TC00140250		RFT1201200-120		
A1VG2	A1BD204014	CS14150310260	TC00140195	A1TV239271 A1TV239273	RFT224200-040	–	TIM03602708 TIM04002708 TIM05002708
	A1BD206014	CS14150510300	TC00140200		RFT224200-060		
	A1BD208014	CS14150710350	TC00140210		RFT224200-080		
	A1BD210014	CS14150910450	TC00140220		RFT224200-100		
	A1BD212014	CS14151110450	TC00140230		RFT224200-120		
	A1BD214014	CS14151310500	TC00140250		RFT224200-140		
	A1BD216014	CS14151510550	TC00140250		RFT224200-160		
A1VG3	A1BD306019	CS14210490400	TC00140200	A1TV347371 A1TV347373	RFT334200-060	–	TIM05003908
	A1BD308019	CS14210690450	TC00140210		RFT334200-080		
	A1BD310019	CS14210890500	TC00140220		RFT334200-100		
	A1BD312019	CS14211090600	TC00140230		RFT334200-120		
	A1BD314019	CS14211290650	TC00140250		RFT334200-140		
	A1BD316019	CS14211490700	TC00140250		RFT334200-160		
	A1BD318019	CS14211690750	TC00140270		RFT334200-180		
A1VG4	A1BD408025	CS01280680600	TC00140210	A1TV450621 A1TV450623	RFT438200-080	–	TIM05404408
	A1BD410025	CS01280880700	TC00140220		RFT438200-100		
	A1BD412025	CS01281080750	TC00140230		RFT438200-120		
	A1BD414025	CS01281280800	TC00140250		RFT438200-140		
	A1BD416025	CS01281480850	TC00140250		RFT438200-160		
	A1BD418025	CS01281680900	TC00140270		RFT438200-180		
	A1BD420025	CS01281880950	TC00140270		RFT438200-200		

Power	White(2X)	Power
	Yellow/Green	Earth
Thermocouple	Blue	Minus[-]
	Red	Positive[+]

➔ A1 VG Cylinder Spare Parts

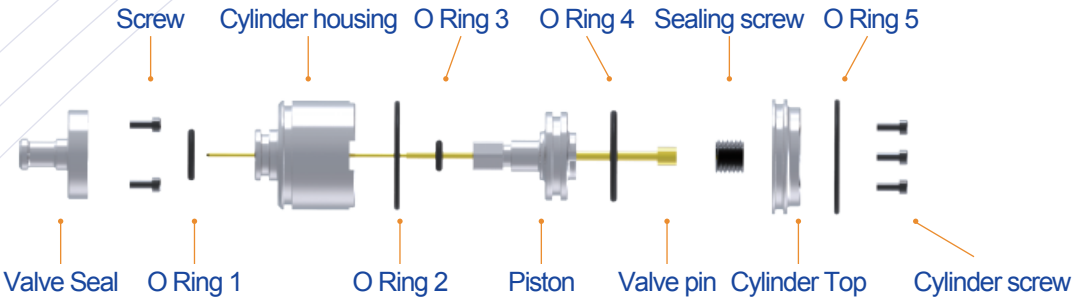

A1 VG Cylinder spare parts

Size	Valve seal	Cylinder housing	Piston	Cylinder top	Valve pins	Screw	Sealing screw	Cylingder screw
A1VG1 A1VG2	CPVS063124	CPCY063835	CPPT063136	CPCT064010	PN0415230 PN0415230-G2 PN0620260 PN0620260-G2 PN0625260 PN0625260-G2 PN0625350 PN0625350-G2	M4X8	GS1215-10	M5X12X10
A1VG3	CPVS093424	CPCY095235	CPPT094536	CPCT095410	PN0935280 PN0935280-G2 PN0935400 PN0935400-G2 PN0935620-M	M4X8	GS1215-10	M5X12X10
A1VG4	CPVS143624	CPCY146135	CPPT145436	CPCT146310	PN1460305 PN1460623	M4X8	GS1215-10	M5X12X10

Size	O-Ring 1	O-Ring 2	O-Ring 3	O-Ring 4	O-Ring 5
A1VG1 A1VG2	ORIN-00228	ORIN-00234	ORIN-00227	ORIN-00233	ORIN-00235
A1VG3	ORIN-00228	ORIN-00226	ORIN-00227	ORIN-00225	ORIN-00224
A1VG4	ORIN-00232	ORIN-00236	ORIN-00231	ORIN-00224	ORIN-00237

A1 VG Cylinder bore dimension

Size	D0	D1	D3	D4	D5	E1	E2	E3	E4
ACCP15230 ACCP20260 ACCP25260	42	40	18	6	12	24	23	15	18
ACCP35280 ACCP35400	56	54	18	7	12	31	29	19	19
ACCP60623 ACCP60305	65	63	21	7	15	35.5	33	23	23

HEATLOCK®

Hong Kong:
Heatlock Co Ltd
Witty Commercial Building, 9-FL, Room 12/F,
1A-1L Tung Choi Street, Mong Kok, KLN, Hong Kong
ph: +852 8120 5469

China PRC:
Ramada Plaza, Room 1108, Building 1, Beijiao Town
Shunde District, Foshan City, Guangdong, PRC
Postal code: 528311
ph: +86 757 2991 5868
fx: +86 757 2991 5860

Order & info:
frontdesk@heatlock.com

To find one of our dedicated Heatlock technology or service centres please visit our website **www.heatlock.com**

Heatlock © 04/2020. All right reserved.