HEATLOCK®

# YOUR GLOBAL HOT-RUNNER SOLUTION

A3 EN

www.heatlock.com

HEATLOCK®

# Global Hot Runner Solution Provider

Our passion is hot runner solutions and we pride ourselves on simplicity whilst maintaining maximum performance, achieving modular perfection.
Our Operation is set up according to international business standards with strict quality and management system as key ingredients. We have more than 30 years' experience with Hot Runner Solutions.
We supply standardised products or special hot runner solutions, hot half's all up to your specific requirements. All simulated in depth, if needed, by our global partners. Our network has top of the line tech know-how.

**Ceramic insulated, CE technology**
HEATLOCK Hot Runners are known for their ceramic insulation, which insulates all the contact- and location-points from the mould. With our patented CE fix technology have we made ceramics even easier to use with increased sustainability

**Service fanatics**
Heatlock is a service company fanatic about customer care, we deliver hot runner solutions, your lean partner.

**Global partners**
Throughout our global network of partners, HEATLOCK guarantees high quality service no matter where your mould is produced or in production. You make your mould in China, Germany, Portugal, UK…….our Global Call service takes care of you.

Tech centre and spare part stock in;

**China * Germany * US**

**GLOBAL ASSISTANCE, HELP ANYWHERE=GLOBAL CALL BY HEATLOCK**

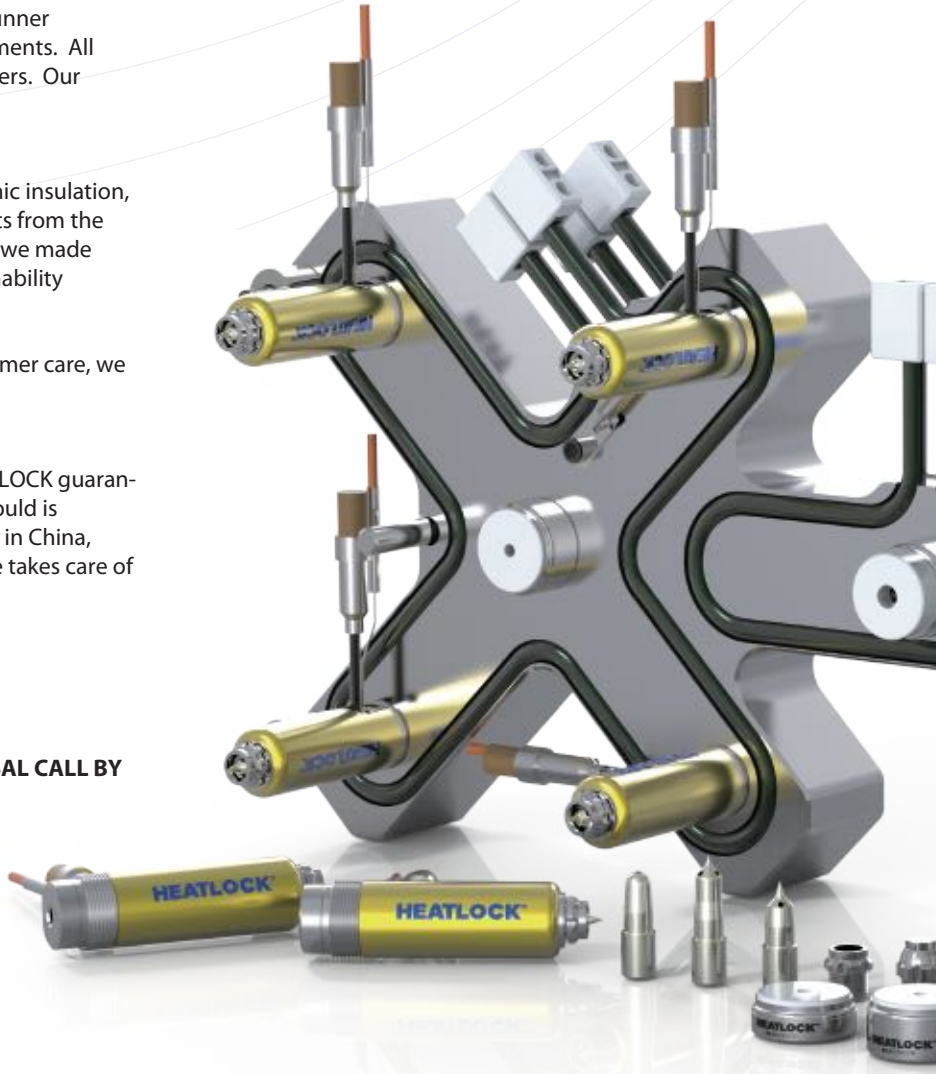

# ALL-IN-ONE Technology

Hot Runners re-engineered to make it simple and easy to use with maximum performance and modularity. Commodity applications use the standard configurations for engineering resins simply up-grade with our high performance modules. Simply drop the Hot Runner system in your mould and adjust gate position to the optimum position using our virtual gate position technology, V-GATE.

All wire exits are to pre-determined once gate position is fixed. Grind back spacers to adjust for calculated heat expansion;close the clamp plate and you are ready to go.

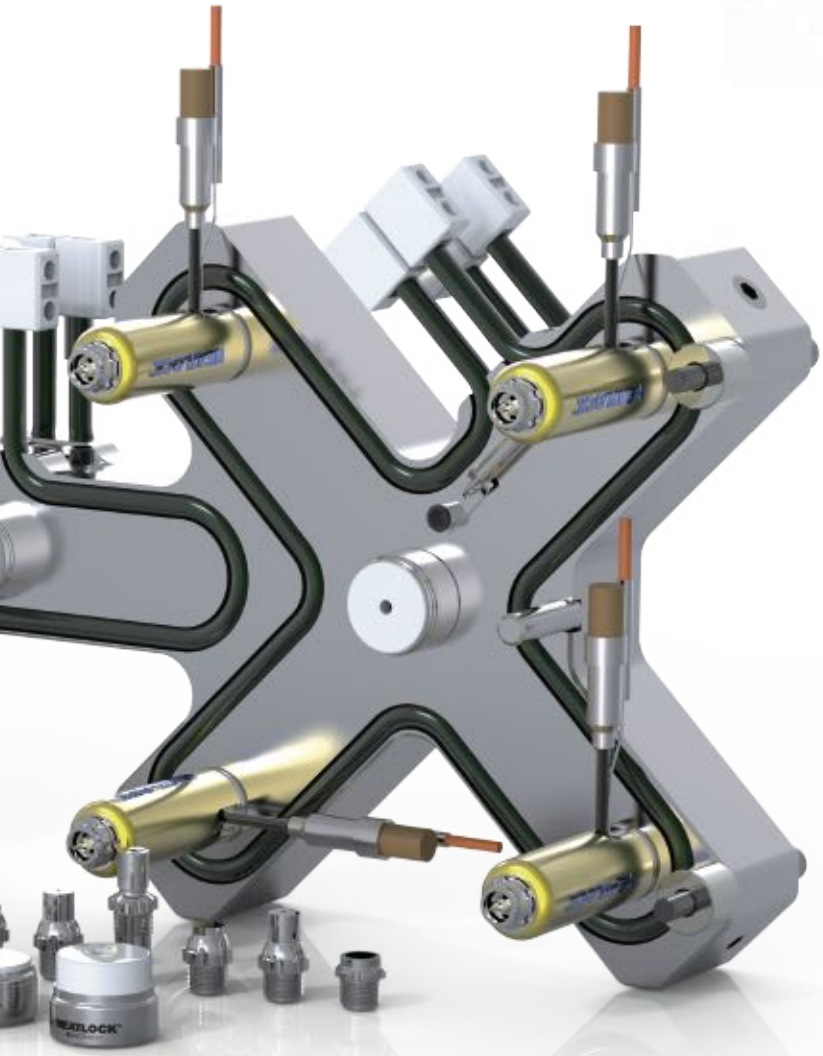

# Ceramic Clamp Technology CE-FIX

Lateset development with our well proven ceramic insulation technology! We were the first Hot Runner provider to introduce Hot Runners with Ceramics in 1982. Ceramic insulation is superior compared with other materials. With the ceramic insulation HEAT LOCK inside your Hot Runner System. This result to less temperature drop on contact surfaces and still with excessive support surfaces to ensure mould stability at the same time energy saving. With our latest patented CE-FLX technology we have made ceramics even easier to use with increased suatainability, easy to install and adjust.

# ➔ A3 Technology

ALL-IN-ONE technology

With it's unique new AO-LOCK system we secure the nozzles with the manifold to make the Hot Runner system leak free. All wire exits is to pre-determined position to ensure your designed wire slots match the Hot Runner system.
Select nozzle size, length and front style which suits the need of your parts gate requirement in our nozzle guide section.

We have 13 front styles to choose from, all available in one hole tip or three hole tip option.
(you can have one hole tips or three holes tips of our standard needle tip.) If you mould glass filled resins and needs a wear resistant tip for maximised life choose our TZM tip which is available in a one hole style. All tips are designed to give minimum stress to material while maintaining a(keeping a good) /stable/controlled gate temperature.

Simply drop the Hot Runner system in your mould and adjust gate position to your maximised position using our virtual gate position technology, V-GATE, can it get easier?

Front styles:

NSS/PSS: Nut style no visible gate mark on your part
NPS/PPS: Front style give you a ring gate mark on the part
NPX/PPX: Front extended style give you a ring gate mark on the part used on contoured parts or when you gate on a runner
NSX/PSX/VSX: Front extended style, Excellent for glass filled resins and high temperature moulding

NOS

NOX

NPS

NPX
NEW

NSX

POS

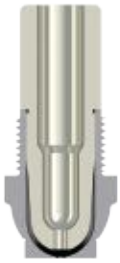
PPS

PPX

PSX
NEW

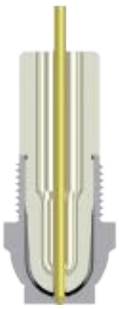
VGS

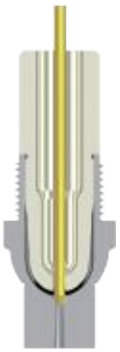
VGX

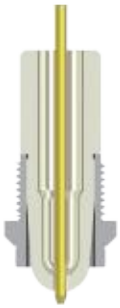
VOS

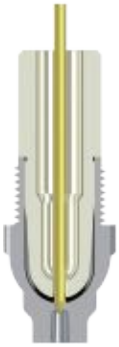
VSX
NEW

# ➔ A3 Nozzle Selection Guide

(mm)

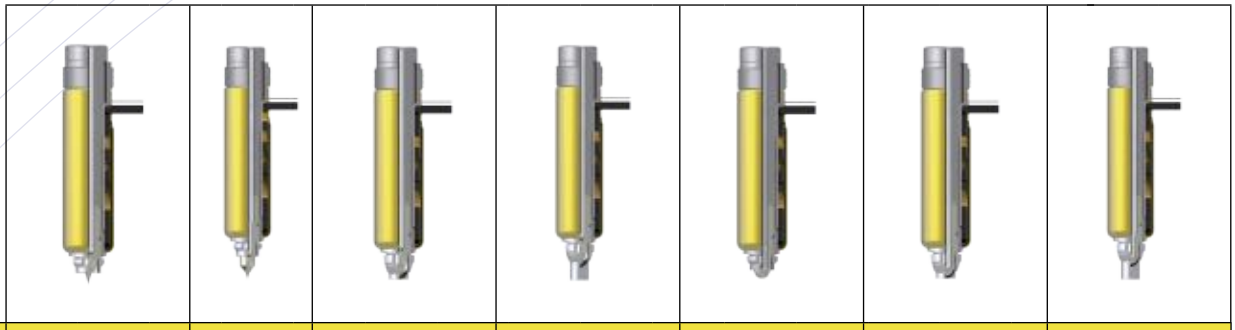

| Type | NOS | | | NOX | | NPS | | | NPX/NSX | | | POS | | | PPS | | | PPX/PSX | | |
|---|---|---|---|---|---|---|---|---|---|---|---|---|---|---|---|---|---|---|---|---|
| Feed Φ | 4 | 5 | 7 | 5 | 7 | 4 | 5 | 7 | 4 | 5 | 7 | 4 | 5 | 7 | 4 | 5 | 7 | 4 | 5 | 7 |
| Gate Φ | 0.6~1.5 | 0.6~2 | 0.8~3 | 0.6~2 | 0.8~3 | 0.6~1.5 | 0.6~2 | 0.8~3 | 0.6~1.5 | 0.6~2 | 0.8~3 | 0.6~1.5 | 0.6~2 | 0.8~3 | 0.6~1.5 | 0.6~2 | 0.8~3 | 0.6~1.5 | 0.6~2 | 0.8~3 |

| Max. Recommended shot weight | | | | | | | | | | | | | | | | | | | | |
|---|---|---|---|---|---|---|---|---|---|---|---|---|---|---|---|---|---|---|---|---|
| Low | 80 | 200 | 400 | 200 | 400 | 80 | 200 | 400 | 80 | 200 | 400 | 100 | 300 | 600 | 100 | 300 | 600 | 100 | 300 | 600 |
| Medium | 60 | 100 | 260 | 100 | 260 | 60 | 100 | 260 | 60 | 100 | 260 | 60 | 125 | 310 | 60 | 125 | 310 | 60 | 125 | 310 |
| High | 5 | 20 | 50 | 20 | 50 | 5 | 20 | 50 | 5 | 20 | 50 | 7 | 25 | 60 | 7 | 25 | 60 | 7 | 25 | 60 |

| Suitability | | | | | | | | | | | | | | | | | | | | |
|---|---|---|---|---|---|---|---|---|---|---|---|---|---|---|---|---|---|---|---|---|
| PP | *** | *** | *** | *** | *** | *** | *** | *** | *** | *** | *** | *** | *** | *** | *** | *** | *** | *** | *** | *** |
| PS/PE | *** | *** | *** | *** | *** | *** | *** | *** | *** | *** | *** | *** | *** | *** | *** | *** | *** | *** | *** | *** |
| ABS/SAN | *** | *** | *** | *** | *** | *** | *** | *** | *** | *** | *** | *** | *** | *** | *** | *** | *** | *** | *** | *** |
| POM | *** | *** | *** | *** | *** | *** | *** | *** | *** | *** | *** | *** | *** | *** | *** | *** | *** | *** | *** | *** |
| LCP | * | * | * | * | * | * | * | * | * | * | * | * | * | * | * | * | * | * | * | * |
| PBT | * | * | * | * | * | * | * | * | * | * | * | * | * | * | * | * | * | * | * | * |
| PET | * | * | * | * | * | * | * | * | * | * | * | * | * | * | * | * | * | * | * | * |
| PA6/PA66 | *** | *** | *** | *** | *** | *** | *** | *** | *** | *** | *** | *** | *** | *** | *** | *** | *** | *** | *** | *** |
| PC | *** | *** | *** | *** | *** | *** | *** | *** | *** | *** | *** | *** | *** | *** | *** | *** | *** | *** | *** | *** |
| PMMA | *** | *** | *** | *** | *** | *** | *** | *** | *** | *** | *** | *** | *** | *** | *** | *** | *** | *** | *** | *** |
| PPO | * | * | * | * | * | * | * | * | * | * | * | * | * | * | * | * | * | * | * | * |
| PES/PEK | * | * | * | * | * | * | * | * | * | * | * | * | * | * | * | * | * | * | * | * |
| PPS/PEI | * | * | * | * | * | * | * | * | * | * | * | * | * | * | * | * | * | * | * | * |

**Viskosity:** Low | Medium | High

*** Good ** Ok * Contact HEATLOCK -- Not recommented

All value above &approximate.For details regrading your product welcome to contact Heatlock.

# → A3 Gate Diameter

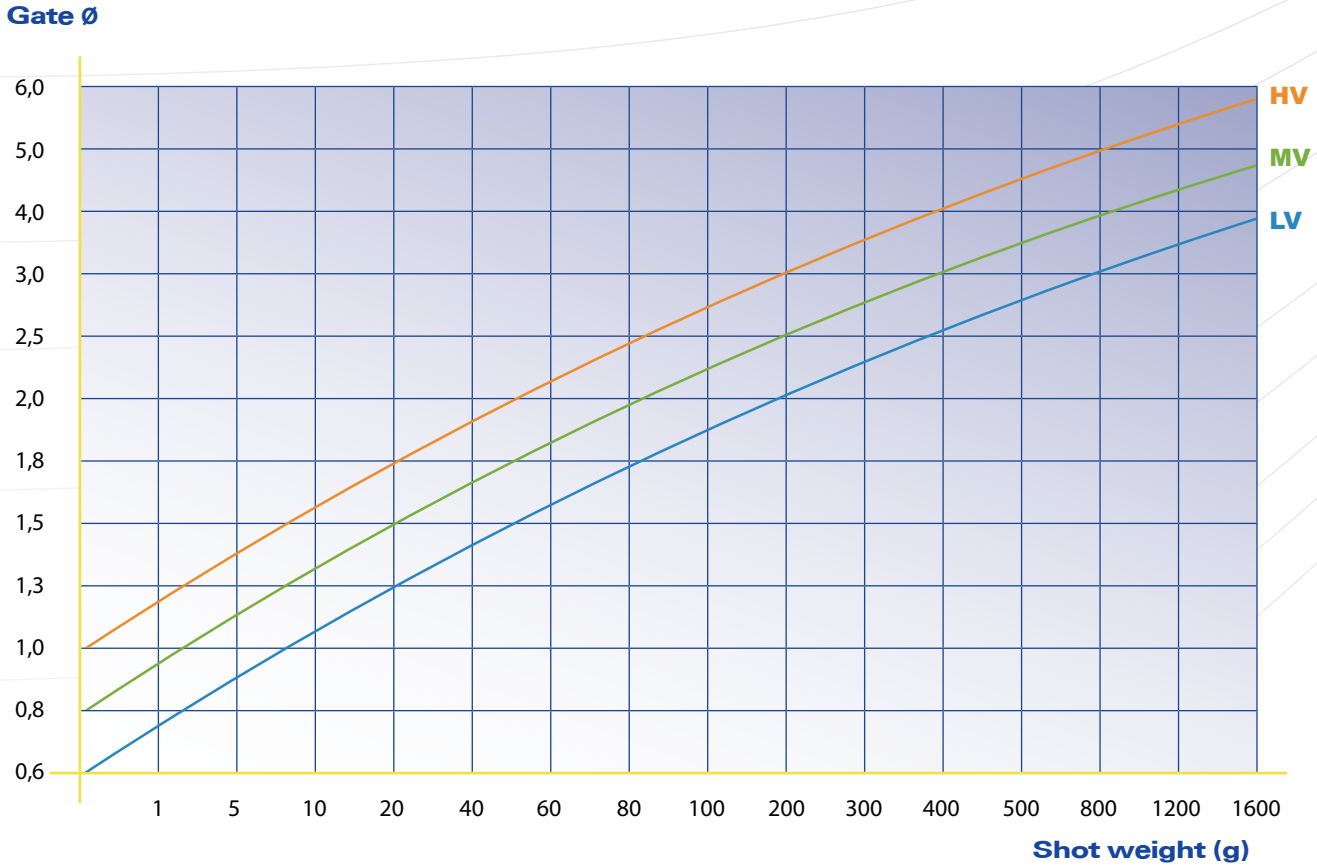


**NOTE:**
1. For "TP" type reduce gate Ø -30%
2. For filled materials increase gate Ø +20%

1. **LV** **Low viscosity** materials PS, PE, PP
2. **MV** **Medium viscosity** materials ABS, SAN, PA, POM
3. **HV** **High viscosity** materials PC, PMMA, PC/ABS, PUR

Above diagram is a guideline built on experience from thousands of applications. However is the result depending on numerous conditions in your mould; balance between shot weight, injection speed, injection pressure, mould temperature, temperature control around the gate area, temperature control opposite the gate.

A smaller gate freeze faster compared with a larger gate, a faster cycle time allow smaller gate, long cycle time requires bigger gate.

If cycle time is short and injection speed fast it may be necessary to design gate cooling to avoid gate to overheat.
When you gate on a runner is it recommended to make the gate slightly larger to reduce pressure drop and decrease shear rates. Runner shall be adjusted in size to suit Hot Runner moulding to get shortest cycle time.

Above diagram is a guideline only, final decision is to be decided by the moulder or simulation considering all factors of the process.

# ➔ A3 NOS+NPS+NPX+NSX Series

NOS
- Topless direct gate small residue on the part
- One hole options for shear sensitive materials
- TZM one exit tips for reinforced materials

NPX
- Direct gate small residue on the part, reduced stringing
- One exit options for shear sensitive materials, TZM one exit tips for reinforced materials
- Gating on contour or with a sprue gate
- Exchangeable gate, gate separated from mould plate

NPS
- Direct gate small residue on the part, reduced stringing
- One exit options for shear sensitive materials, TZM one exit tips for reinforced materials
- Exchangeable gate, gate separated from mould plate

NSX
- Perfect hot to cold solution
- Direct gate on the part, reduced stringing
- One exit options for shear sensitive materials, TZM tips for reinforced materials
- Exchangeable front, gate separated from mould plate
- Excellent for glass filled resins and high temperature moulding

NOS

NPS

NPX

NSX
**NEW**

| Size | Size 04 | Size 05 | Size 07 |
|---|---|---|---|
| LA | 64~114 | 64~134 | 74~174 |
| Feed Φ | 4 | 5 | 7 |
| Gate Φ | 0.6~1.5 | 0.6~2 | 0.8~3 |

| Shot Weight(g) | | | |
|---|---|---|---|
| Low | 80 | 200 | 400 |
| Medium | 60 | 100 | 260 |
| High | 5 | 20 | 50 |

# ➔ A3 NOS+NPS+NPX+NSX Guide

**Order example:**

**A3 - NOS - 094 - 05 - 1 - 3**

| Nozzle series | Nut/Front type | LA | Feed dia. | Tip mat. | Exits in tip |
|---|---|---|---|---|---|

**Tip codes:**
material: 1=copper alloy,3=HBM-CDC,4=TZM-SHN
Exits: 1=one exit,3=three exit

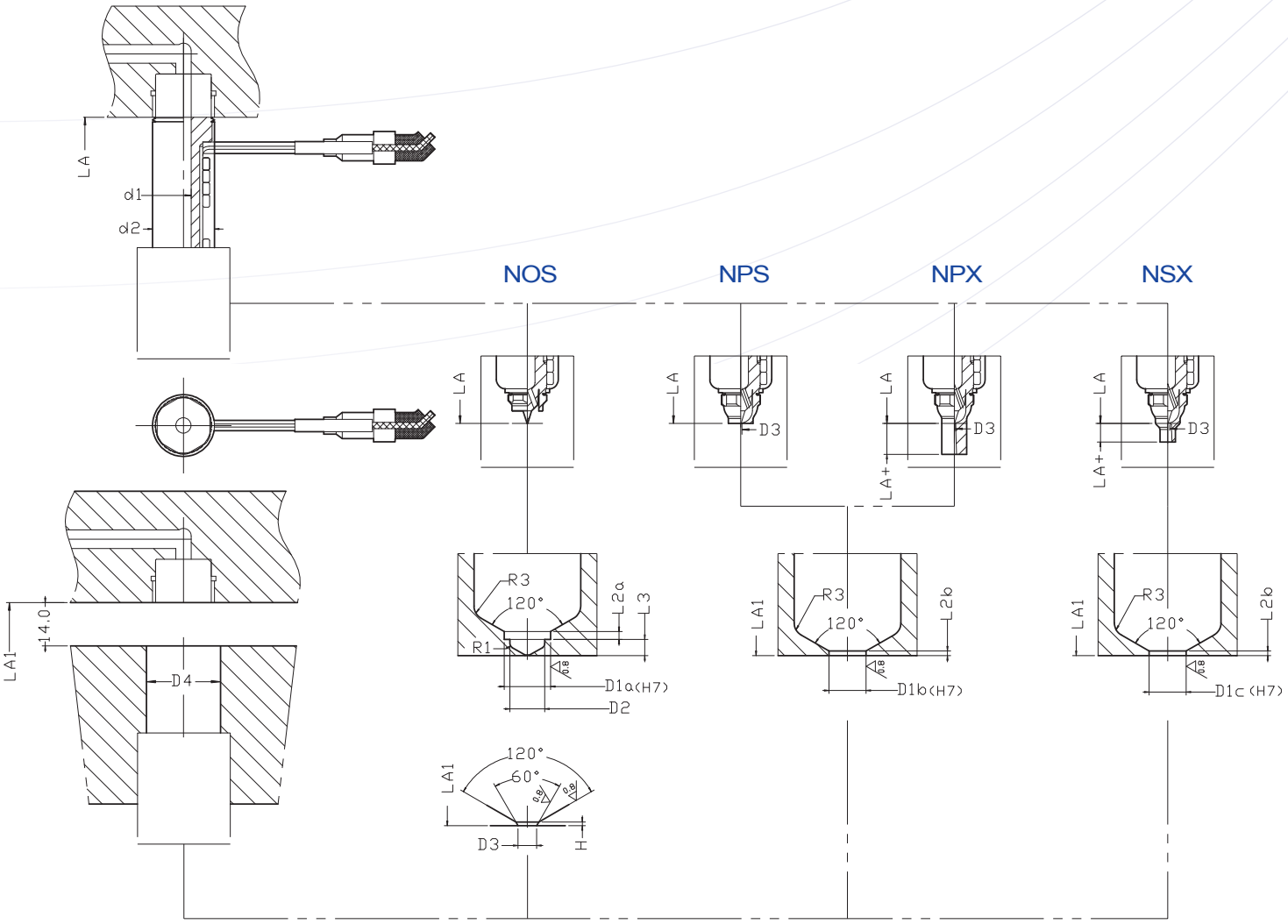

# ➔ A3 NOS+NPS+NPX+NSX Dimension

(mm)

| | A3+NOS NPS NPX NSX | | | | | | | | | | | | | | | |
|---|---|---|---|---|---|---|---|---|---|---|---|---|---|---|---|---|
| | **Size** | **04** | | | | **05** | | | | | **07** | | | | | |
| **Nozzle** | **LA** | 64 | 74 | 94 | 114 | 64 | 74 | 94 | 114 | 134 | 74 | 94 | 114 | 134 | 154 | 174 |
| | **LA+** | 6 | | | | 10(PX),6(SX) | | | | | 15(PX),7(SX) | | | | | |
| | **d1** | 4 | | | | 5 | | | | | 7 | | | | | |
| | **d2** | 13 | | | | 20 | | | | | 23 | | | | | |
| | | | | | | | | | | | | | | | | |
| **Mould** | **LA1** | 64.15 | 74.17 | 94.21 | 114.25 | 64.15 | 74.17 | 94.21 | 114.25 | 134.29 | 74.17 | 94.21 | 114.25 | 134.29 | 154.33 | 174.37 |
| | **L2a** | 1.1 | | | | 2 | | | | | 2.5 | | | | | |
| | **L2b** | 1 | | | | 1 | | | | | 1.5 | | | | | |
| | **L3** | 1.7 | | | | 3.5 | | | | | 3.5 | | | | | |
| | **D1a** | 6 | | | | 10 | | | | | 12 | | | | | |
| | **D1b** | 6 | | | | 8 | | | | | 10 | | | | | |
| | **D1c** | 5 | | | | 5 | | | | | 7 | | | | | |
| | **D2** | 4.5 | | | | 7.5 | | | | | 9 | | | | | |
| | **D3** | 1.5≥0.6 | | | | 2≥0.6 | | | | | 3≥0.8 | | | | | |
| | **D4** | 15 | | | | 23 | | | | | 27 | | | | | |
| | **H** | 0.2 | | | | 0.2 | | | | | 0.2 | | | | | |

# ➔ A3 NOS+NPS+NPX+NSX Spare Parts

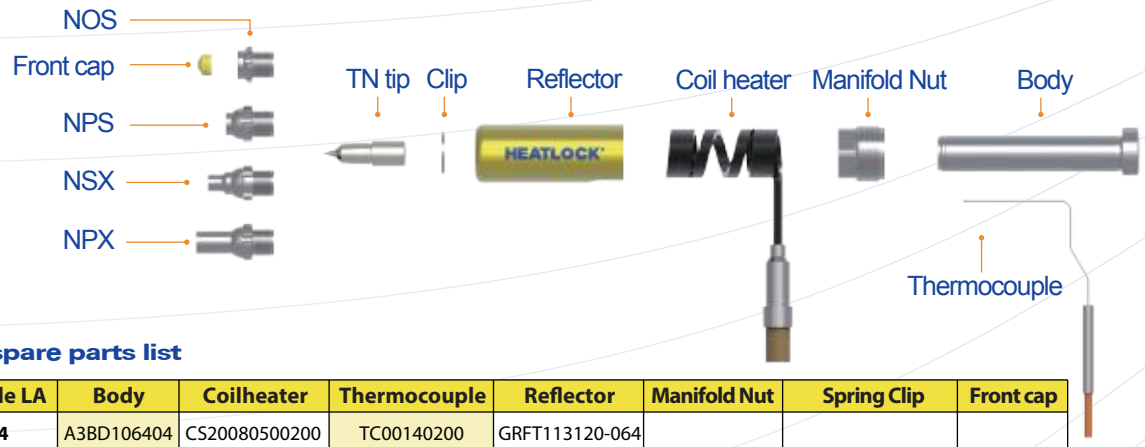


## Nozzle body spare parts list

| Size | Nozzle LA | Body | Coilheater | Thermocouple | Reflector | Manifold Nut | Spring Clip | Front cap |
|---|---|---|---|---|---|---|---|---|
| 04 | 64 | A3BD106404 | CS20080500200 | TC00140200 | GRFT113120-064 | A3KG1413 | F-S-SPRINGCLIP-8408 | A3FC044724 (optional) |
| | 74 | A3BD107404 | CS20080600250 | TC00140210 | GRFT113120-074 | | | |
| | 94 | A3BD109404 | CS20080800300 | TC00140220 | GRFT113120-094 | | | |
| | 114 | A3BD111404 | CS20081000350 | TC00140220 | GRFT113120-114 | | | |
| 05 | 64 | A3BD106405 | CS14120430200 | TC00140200 | GRFT120120-064 | A3KG2016 | F-S-SPRINGCLIP-1210 | A3FC057939 A3FC057949 (optional) |
| | 74 | A3BD107405 | CS14120530225 | TC00140210 | GRFT120120-074 | | | |
| | 94 | A3BD109405 | CS14120730250 | TC00140220 | GRFT120120-094 | | | |
| | 114 | A3BD111405 | CS14120930350 | TC00140220 | GRFT120120-114 | | | |
| | 134 | A3BD113405 | CS14121130350 | TC00140250 | GRFT120120-134 | | | |
| 07 | 74 | A3BD207407 | CS14150510300 | TC00140200 | GRFT224200-074 | A3KG2416 | F-S-SPRINGCLIP-1410 | A3FC079443 (optional) |
| | 94 | A3BD209407 | CS14150710350 | TC00140210 | GRFT224200-094 | | | |
| | 114 | A3BD211407 | CS14150910450 | TC00140220 | GRFT224200-114 | | | |
| | 134 | A3BD213407 | CS14151110450 | TC00140230 | GRFT224200-134 | | | |
| | 154 | A3BD215407 | CS14151310500 | TC00140250 | GRFT224200-154 | | | |
| | 174 | A3BD217407 | CS14151510550 | TC00140250 | GRFT224200-174 | | | |

## Front Assembly Spare Part

| Item code | Size 04 | | Item code | Size 05 | | Item code | Size 07 | |
|---|---|---|---|---|---|---|---|---|
| | Nut/Front | Tip | | Nut/Front | Tip | | Nut/Front | Tip |
| A3NOS0307061-1 | A3OS030706 | A3TN0306161-1 | A3NOS110101-1 | A3OS11010 | A3TN109281-1 | A3NOS212121-1 | A3OS21212 | A3TN211351-1 |
| A3NOS0307061-2 | | A3TN0306161-2 | A3NOS110103-1 | | A3TN109283-1 | A3NOS212123-1 | | A3TN211353-1 |
| A3NOS0307063-1 | | A3TN0306163-1 | A3NOS110104-1 | | A3TN109284-1 | A3NOS212124-1 | | A3TN211354-1 |
| A3NPS0307061-1 | A3PS030706 | A3TN0306161-1 | A3NOS110101-3 | | A3TN109281-3 | A3NOS212121-3 | | A3TN211351-3 |
| A3NPS0307061-2 | | A3TN0306161-2 | A3NPS108101-1 | A3PS10810 | A3TN109281-1 | A3NPS210121-1 | A3PS21012 | A3TN211351-1 |
| A3NPS0307063-1 | | A3TN0306163-1 | A3NPS108103-1 | | A3TN109283-1 | A3NPS210123-1 | | A3TN211353-1 |
| A3NPX0307061-1 | A3PX030706 | A3TN0306161-1 | A3NPS108104-1 | | A3TN109284-1 | A3NPS210124-1 | | A3TN211354-1 |
| A3NPX0307061-2 | | A3TN0306161-2 | A3NPS108101-3 | | A3TN109281-3 | A3NPS210121-3 | | A3TN211351-3 |
| A3NPX0307063-1 | | A3TN0306163-1 | A3NPX108101-1 | A3PX10810 | A3TN109281-1 | A3NPX210121-1 | A3PX21012 | A3TN211351-1 |
| A3NSX0305071-1 | A3SX030507 | A3TN0306161-1 | A3NPX108103-1 | | A3TN109283-1 | A3NPX210123-1 | | A3TN211353-1 |
| A3NSX0305071-2 | | A3TN0306161-2 | A3NPX108104-1 | | A3TN109284-1 | A3NPX210124-1 | | A3TN211354-1 |
| A3NSX0305073-1 | | A3TN0306163-1 | A3NPX108101-3 | | A3TN109281-3 | A3NPX210121-3 | | A3TN211351-3 |
| | | | A3NSX105101-1 | A3SX10510 | A3TN109281-1 | A3NSX207121-1 | A3SX20712 | A3TN211351-1 |
| | | | A3NSX105103-1 | | A3TN109283-1 | A3NSX207123-1 | | A3TN211353-1 |
| | | | A3NSX105104-1 | | A3TN109284-1 | A3NSX207124-1 | | A3TN211354-1 |
| | | | A3NSX105101-3 | | A3TN109281-3 | A3NSX207121-3 | | A3TN211351-3 |

## TN tip spare part list

| Size | 1 exit | | | 3 exits |
|---|---|---|---|---|
| | copper | HBM-CDC | TZM-SHN | copper |
| Size 04 | A3TN0306161-1 | A3TN0306163-1 | * | * |
| | A3TN0306161-2 | | | |
| Size 05 | A3TN109281-1 | A3TN109283-1 | A3TN109284-1 | A3TN109281-3 |
| Size 07 | A3TN211351-1 | A3TN211353-1 | A3TN211354-1 | A3TN211351-3 |

# ➔ A3 POS+PPS+PPX+PSX Series

POS
- Topless direct gate or on a sprue gate
- Open flow little shear stress
- Fast gate cooling

PPS
- Topless direct gate or on a sprue gate
- Open flow little shear stress
- Exchangeable gate, gate separated from mould plate

PPX
- Direct gate or on a sprue gate small residue on the part
- Open flow little shear stress
- Gating on contour or with a sprue gate
- Exchangeable gate, gate separated from mould plate

PSX
- Perfect hot to cold solution
- Direct gate on the part, reduced stringing
- Exchangeable front, gate separated from mould plate
- Excellent for glass filled resins and high temperature moulding

POS PPS PPX PSX NEW

| Size | Size 04 | Size 05 | Size 07 |
|---|---|---|---|
| LA | 64~114 | 64~134 | 74~174 |
| Feed Φ | 4 | 5 | 7 |
| Gate Φ | 0.6~1.5 | 0.6~2 | 0.8~3 |

| Shot Weight(g) | | | |
|---|---|---|---|
| Low | 100 | 300 | 600 |
| Medium | 60 | 125 | 310 |
| High | 7 | 25 | 60 |

# ➔ A3 POS+PPS+PPX+PSX Guide

**Order sample:**

**A3 - POS - 094 - 05**

| Nozzle series | Nut/Front type | LA | Feed dia |
|---|---|---|---|

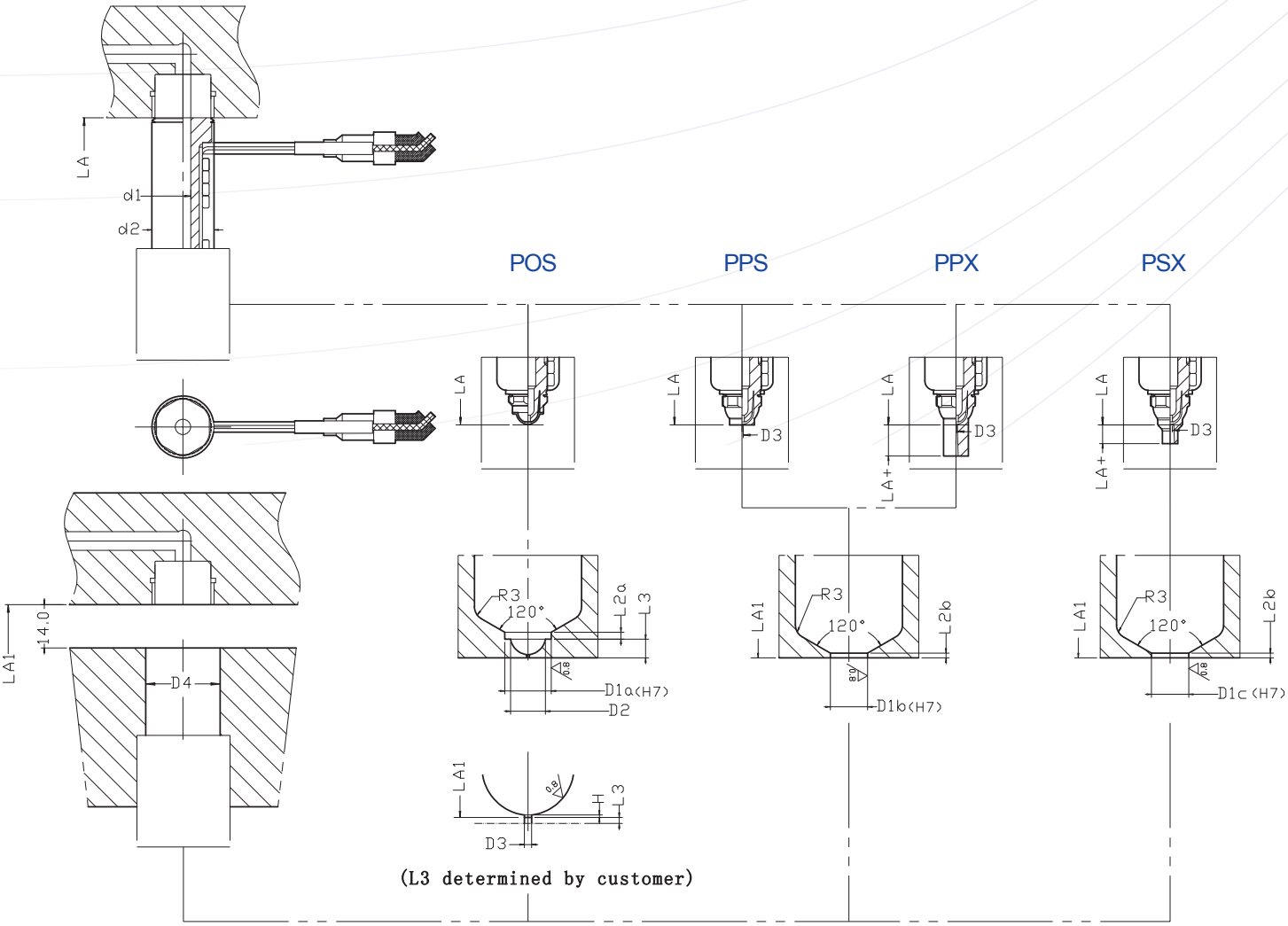

# ➔ A3 POS+PPS+PPX+PSX Dimension

(mm)

| | A3+POS PPS PPX PSX | | | | | | | | | | | | | | | | |
|---|---|---|---|---|---|---|---|---|---|---|---|---|---|---|---|---|---|
| | **Size** | **04** | | | | | **05** | | | | | **07** | | | | | |
| **Nozzle** | **LA** | 64 | 74 | 94 | 114 | 134 | 64 | 74 | 94 | 114 | 134 | 74 | 94 | 114 | 134 | 154 | 174 |
| | **LA+** | 6 | | | | | 10(PX),6(SX) | | | | | 15(PX),7(SX) | | | | | |
| | **d1** | 4 | | | | | 5 | | | | | 7 | | | | | |
| | **d2** | 13 | | | | | 20 | | | | | 23 | | | | | |
| | | | | | | | | | | | | | | | | | |
| **Mould** | **LA1** | 64.15 | 74.17 | 94.21 | 114.25 | 134.29 | 64.15 | 74.17 | 94.21 | 114.25 | 134.29 | 74.17 | 94.21 | 114.25 | 134.29 | 154.33 | 174.37 |
| | **L2a** | 1.1 | | | | | 2 | | | | | 2.5 | | | | | |
| | **L2b** | 1 | | | | | 2 | | | | | 2 | | | | | |
| | **L3** | 1.7 | | | | | 3.5 | | | | | 3.5 | | | | | |
| | **D1a** | 6 | | | | | 10 | | | | | 12 | | | | | |
| | **D1b** | 6 | | | | | 8 | | | | | 10 | | | | | |
| | **D1c** | 5 | | | | | 5 | | | | | 7 | | | | | |
| | **D2** | 4.5 | | | | | 7.5 | | | | | 9 | | | | | |
| | **D3** | 1.5≥0.6 | | | | | 3≥0.6 | | | | | 4≥0.8 | | | | | |
| | **D4** | 15 | | | | | 23 | | | | | 27 | | | | | |
| | **H** | 0.2 | | | | | 0.2 | | | | | 0.2 | | | | | |

# ➔ A3 POS+PPS+PPX+PSX Spare Parts

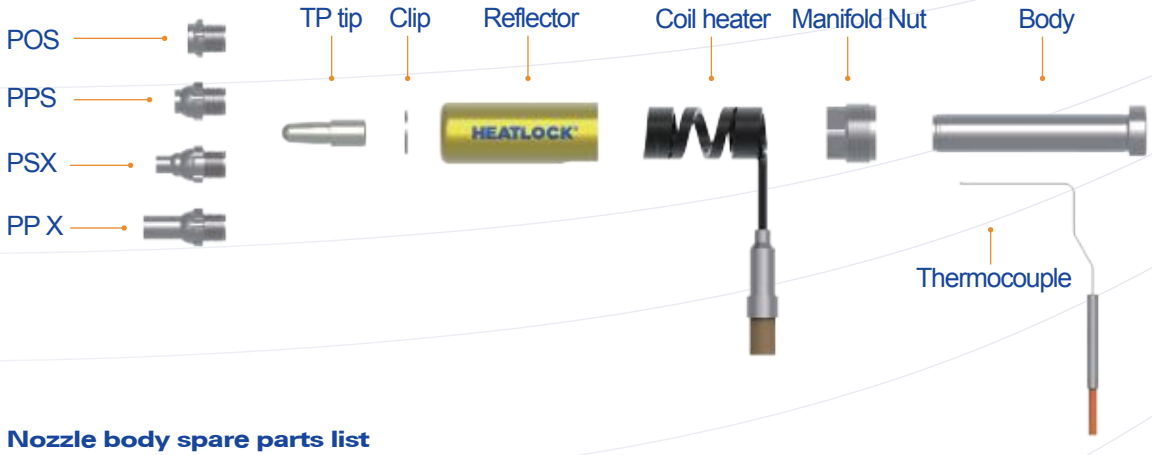


## Nozzle body spare parts list

| Size | Nozzle LA | Body | Coilheater | Thermocouple | Reflector | Manifold Nut | Spring Clip |
|---|---|---|---|---|---|---|---|
| 04 | 64 | A3BD106404 | CS20080500200 | TC00140200 | GRFT113120-064 | A3KG1413 | F-S-SPRINGCLIP-8408 |
| | 74 | A3BD107404 | CS20080600250 | TC00140210 | GRFT113120-074 | | |
| | 94 | A3BD109404 | CS20080800300 | TC00140220 | GRFT113120-094 | | |
| | 114 | A3BD111404 | CS20081000350 | TC00140220 | GRFT113120-114 | | |
| 05 | 64 | A3BD106405 | CS14120430200 | TC00140200 | GRFT120120-064 | A3KG2016 | F-S-SPRINGCLIP-1210 |
| | 74 | A3BD107405 | CS14120530225 | TC00140210 | GRFT120120-074 | | |
| | 94 | A3BD109405 | CS14120730250 | TC00140220 | GRFT120120-094 | | |
| | 114 | A3BD111405 | CS14120930350 | TC00140220 | GRFT120120-114 | | |
| | 134 | A3BD113405 | CS14121130350 | TC00140250 | GRFT120120-134 | | |
| 07 | 74 | A3BD207407 | CS14150510300 | TC00140200 | GRFT224200-074 | A3KG2416 | F-S-SPRINGCLIP-1410 |
| | 94 | A3BD209407 | CS14150710350 | TC00140210 | GRFT224200-094 | | |
| | 114 | A3BD211407 | CS14150910450 | TC00140220 | GRFT224200-114 | | |
| | 134 | A3BD213407 | CS14151110450 | TC00140230 | GRFT224200-134 | | |
| | 154 | A3BD215407 | CS14151310500 | TC00140250 | GRFT224200-154 | | |
| | 174 | A3BD217407 | CS14151510550 | TC00140250 | GRFT224200-174 | | |

## Front Assembly Spare Parts

| Item code | Size 04 | | Item code | Size 05 | | Item code | Size 07 | |
|---|---|---|---|---|---|---|---|---|
| | Nut/Front | Tip | | Nut/Front | Tip | | Nut/Front | Tip |
| A3POS030706 | A3OS030706 | A3TP030615 | A3P0S11010 | A3OS11010 | A3TP109271 | A3POS21212 | A3OS21212 | A3TP211331 |
| A3PPS030706 | A3PS030706 | | A3PPS10810 | A3PS10810 | | A3PPS21012 | A3PS21012 | |
| A3PPX030706 | A3PX030706 | | A3PPX10810 | A3PX10810 | | A3PPX21012 | A3PX21012 | |
| A3PSX030507 | A3SX030507 | | A3PSX10510 | A3SX10510 | | A3PSX20712 | A3SX20712 | |

# ➔ A3 VOS+VGS+VGX+VSX Series

VOS
- Pneumatic valve gate
- No residue on part
- Fast gate cooling

VGS
- Pneumatic valve gate
- No residue on part
- Exchangeable gate, gate separated from mould plate

VGX
- Pneumatic valve gate
- Direct gate or on a sprue gate small residue on the part
- Gating on contour or with a sprue gate
- Exchangeable gate, gate separated from mould plate

VSX
- Pneumatic valve gate
- Perfect hot to cold solution
- Direct gate on the part, reduced stringing
- Exchangeable front, gate separated from mould plate
- Excellent for glass filled resins and high temperature moulding

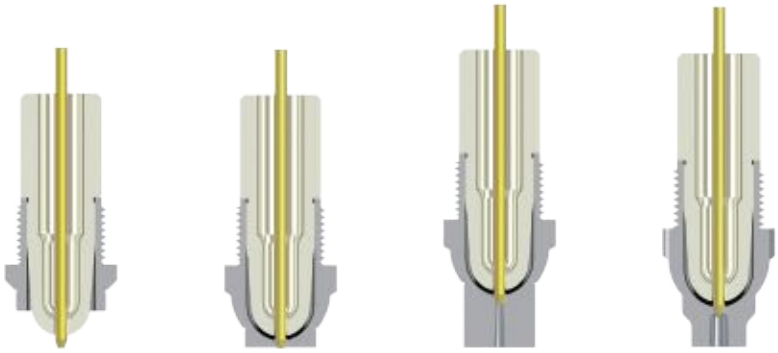

VOS VGS VGX VSX NEW

| Size | Size 05 | Size 07 |
|---|---|---|
| LA | 64~134 | 74~174 |
| Feed Φ | 5 | 7 |
| Gate Φ | ≧0.8 | ≧1.0 |

| Shot Weight(g) | | |
|---|---|---|
| Low | 200 | 500 |
| Medium | 80 | 200 |
| High | 20 | 50 |

# ➔ A3 VOS+VGS+VGX+VSX Guide

**Order sample:**

**A3 - VOS - 094 - 05**

| Nozzle series | Nut/Front type | LA | Feed dia |
|---|---|---|---|

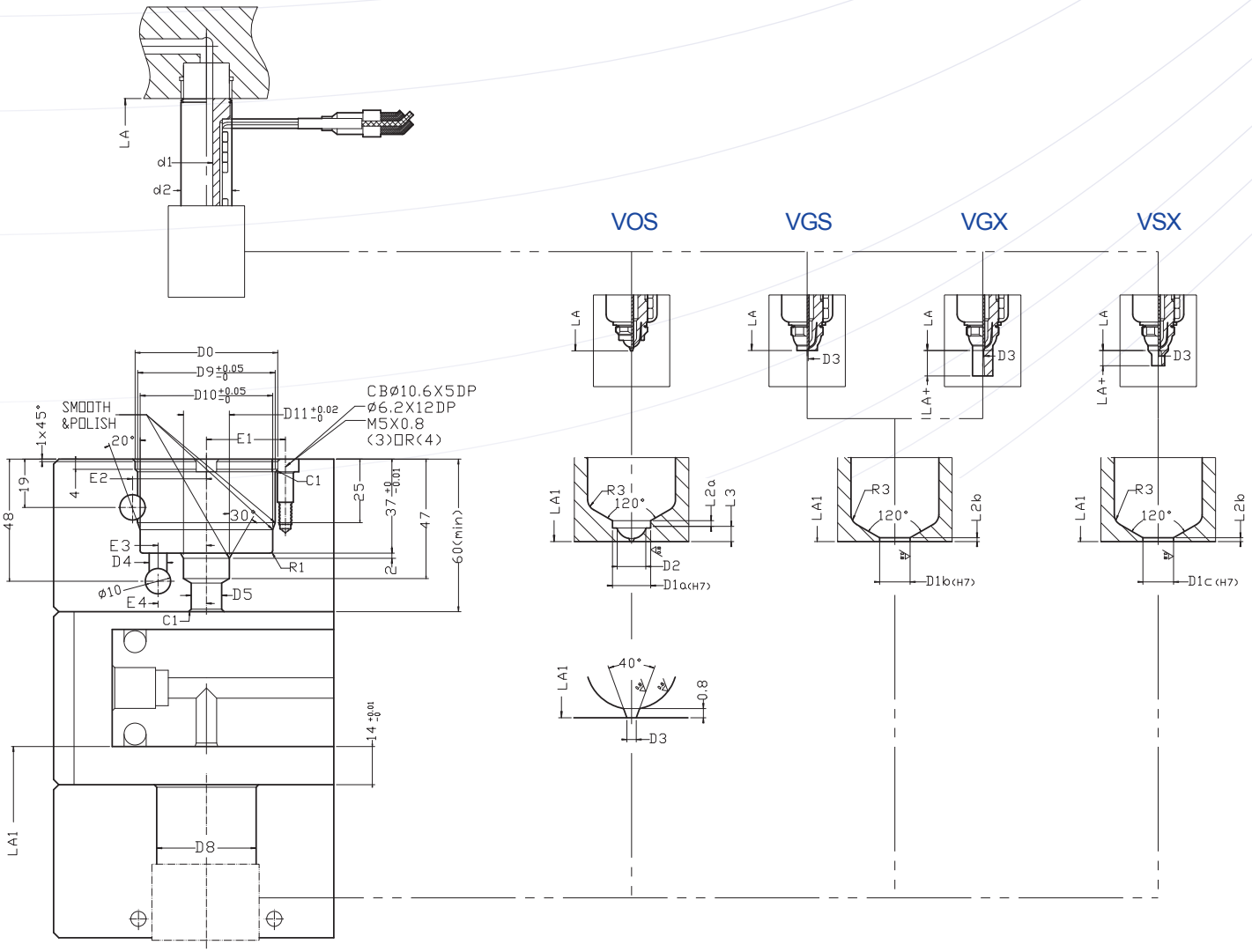

# ➔ A3 VOS+VGS+VGX+VSX Dimension

(mm)

| | A3+VOS VGS VGX VSX | | | | | | | | | | | |
|---|---|---|---|---|---|---|---|---|---|---|---|---|
| Nozzle | Size | 05 | | | | | 07 | | | | | |
| | LA | 64 | 74 | 94 | 114 | 134 | 74 | 94 | 114 | 134 | 154 | 174 |
| | LA+ | 10(PX),6(SX) | | | | | 15(PX),7(SX) | | | | | |
| | d1 | 5 | | | | | 7 | | | | | |
| | d2 | 20 | | | | | 23 | | | | | |
| | D3 | ≥0.8 | | | | | ≥1.0 | | | | | |
| | | | | | | | | | | | | |
| Mould | LA1 | 64.15 | 74.17 | 94.21 | 114.25 | 134.29 | 74.17 | 94.21 | 114.25 | 134.29 | 154.33 | 174.37 |
| | L2a | 2 | | | | | 2.5 | | | | | |
| | L2b | 1 | | | | | 1.5 | | | | | |
| | L3 | 3.5 | | | | | 3.5 | | | | | |
| | D1a | 10 | | | | | 12 | | | | | |
| | D1b | 8 | | | | | 10 | | | | | |
| | D1c | 5 | | | | | 7 | | | | | |
| | D2 | 7.5 | | | | | 9 | | | | | |
| | D8 | 23 | | | | | 27 | | | | | |
| | H | 0.8 | | | | | 0.8 | | | | | |

# ➔ A3 VOS+VGS+VGX+VSX Spare Parts

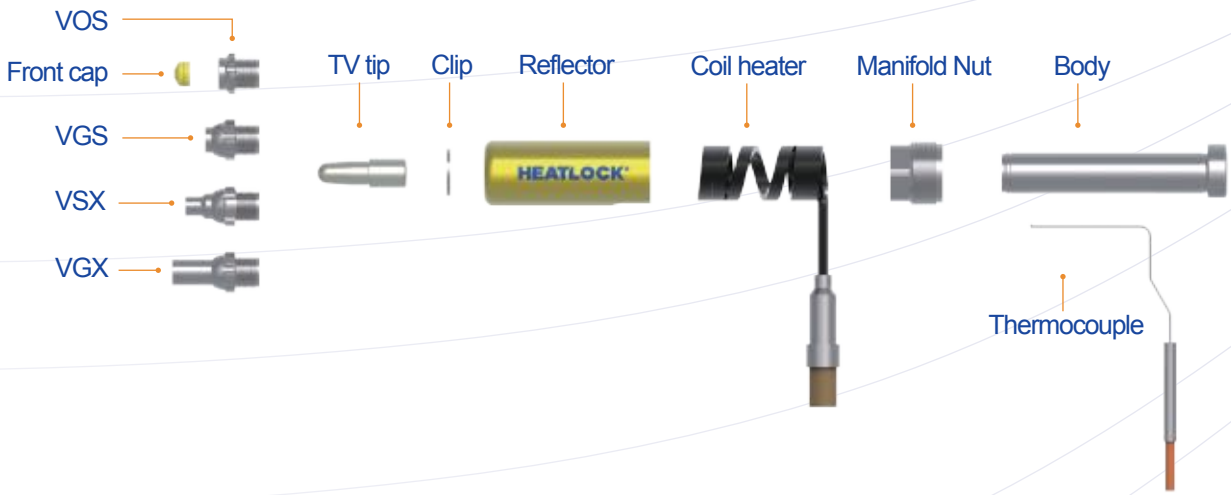


## Nozzle body spare parts list

| Size | Nozzle LA | Body | Coilheater | Thermocouple | Reflector | Manifold Nut | Spring Clip | Front cap |
|---|---|---|---|---|---|---|---|---|
| 05 | 64 | A3BD106405 | CS14120430200 | TC00140200 | GRFT120120-064 | A3KG2016 | F-S-SPRINGCLIP-1210 | A3VGFC057939 (optional) |
| | 74 | A3BD107405 | CS14120530225 | TC00140210 | GRFT120120-074 | | | |
| | 94 | A3BD109405 | CS14120730250 | TC00140220 | GRFT120120-094 | | | |
| | 114 | A3BD111405 | CS14120930350 | TC00140220 | GRFT120120-114 | | | |
| | 134 | A3BD113405 | CS14121130350 | TC00140250 | GRFT120120-134 | | | |
| 07 | 74 | A3BD207407 | CS14150510300 | TC00140200 | GRFT224200-074 | A3KG2416 | F-S-SPRINGCLIP-1410 | A3VGFC079441 (optional) |
| | 94 | A3BD209407 | CS14150710350 | TC00140210 | GRFT224200-094 | | | |
| | 114 | A3BD211407 | CS14150910450 | TC00140220 | GRFT224200-114 | | | |
| | 134 | A3BD213407 | CS14151110450 | TC00140230 | GRFT224200-134 | | | |
| | 154 | A3BD215407 | CS14151310500 | TC00140250 | GRFT224200-154 | | | |
| | 174 | A3BD217407 | CS14151510550 | TC00140250 | GRFT224200-174 | | | |

## Front Assembly Spare Parts

| Item code | Size 05 | | Item code | Size 07 | |
|---|---|---|---|---|---|
| | Nut/Front | Tip | | Nut/Front | Tip |
| A3VOS110101 | A3OS11010 | A3TV109261 | A3VOS212121 | A3OS21212 | A3TV211331 |
| A3VGS108101 | A3GS10810 | | A3VGS210121 | A3GS21012 | |
| A3VGX108101 | A3GX10810 | | A3VGX210121 | A3GX21012 | |
| A3VSX105101 | A3VX10510 | | A3VSX207121 | A3VX20712 | |
| A3VOS110103 | A3OS11010 | A3TV109263 | A3VOS212123 | A3OS21212 | A3TV21133 |
| A3VGS108103 | A3GS10810 | | A3VGS210123 | A3GS21012 | |
| A3VGX108103 | A3GX10810 | | A3VGX210123 | A3GX21012 | |
| A3VSX105103 | A3VX10510 | | A3VSX207123 | A3VX20712 | |

# ➔ A3 VG Cylinder Spare Parts

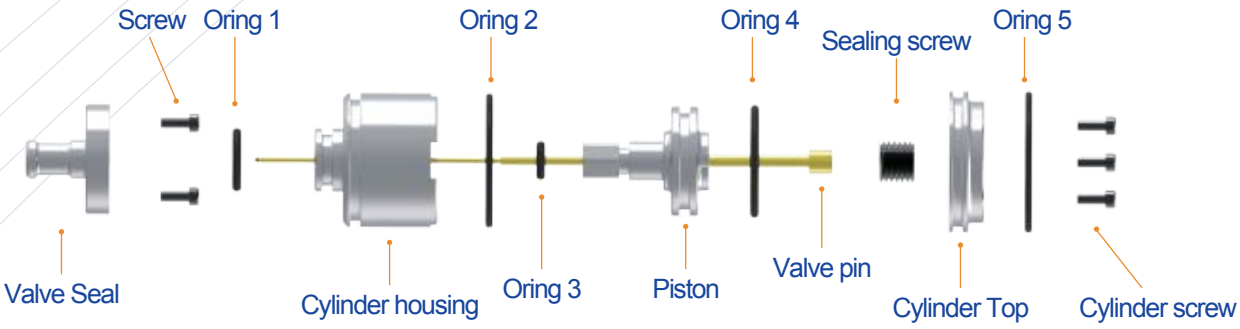


### A3 VG Cylinder spare parts

| Size | Valve seal | Cylinder housing | Piston | Cylinder top | Valve pins | Screw | Sealing screw | Cylinder screw |
|---|---|---|---|---|---|---|---|---|
| A3VG05<br>A3VG07 | CPVS063124 | CPCY063835 | CPPT063136 | CPCT064010 | PN0415230 PN0415230-G2<br>PN0620260 PN0620260-G2<br>PN0625260 PN0625260-G2<br>PN0625350 PN0625350-G2 | M4X8 | GS1215-10 | M5X12X10 |

| Size | O-Ring 1 | O-Ring 2 | O-Ring 3 | O-Ring 4 | O-Ring 5 |
|---|---|---|---|---|---|
| A3VG05<br>A3VG07 | ORIN-00228 | ORIN-00234 | ORIN-00227 | ORIN-00233 | ORIN-00235 |

### A3VG Cylinder bore dimension

(mm)

| Size | D0 | D4 | D5 | D9 | D10 | D11 | E1 | E2 | E3 | E4 |
|---|---|---|---|---|---|---|---|---|---|---|
| ACCP15230<br>ACCP20260<br>ACCP25260 | 42 | 6 | 12 | 40 | 38 | 18 | 24 | 23 | 15 | 18 |

# ➔ A3 NOX Series

NOX
- Topless direct gate small residue on the part
- One exit options for shear sensitive materials

NOX

(mm)

| Size | Size 05 | Size 07 |
|---|---|---|
| LA | 69~139 | 79~179 |
| Feed Φ | 5 | 7 |
| Gate Φ | 0.6~2 | 0.8~3 |

| Shot Weight(g) | | |
|---|---|---|
| Low | 200 | 400 |
| Medium | 100 | 260 |
| High | 20 | 50 |

# ➔ A3 NOX Guide

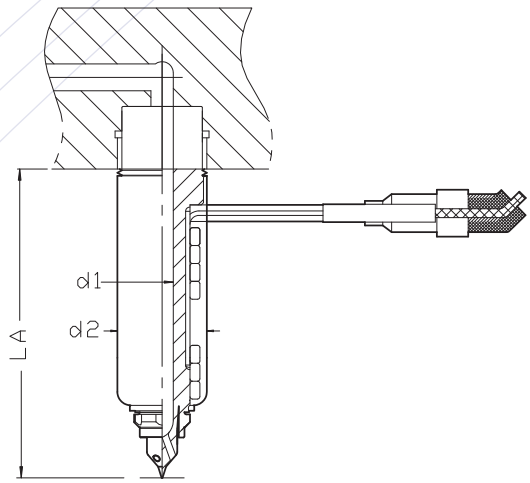


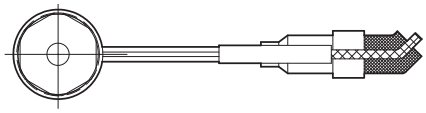

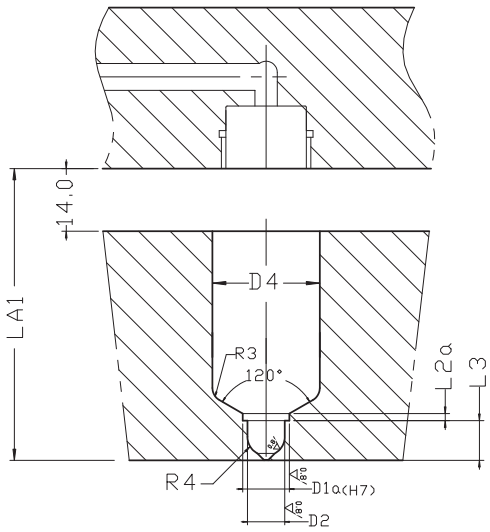


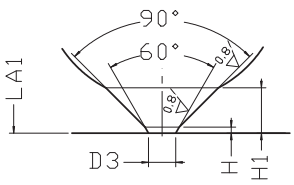


**Order example:**

**A3 - NOX - 095 - 05 - 1 - 3**

| Nozzle series | Nut type | LA | Feed dia | Tip mat. | Exits in tip |
|---|---|---|---|---|---|

**Tip codes:**

material: 1=copper alloy,
Exits: 1=one exit,3=three exit

# ➔ A3 NOX Dimension

(mm)

| | A3 NOX | | | | | | | | | | | |
|---|---|---|---|---|---|---|---|---|---|---|---|---|
| Nozzle | Size | 05 | | | | | 07 | | | | | |
| | LA | 69 | 79 | 99 | 119 | 139 | 79 | 99 | 119 | 139 | 159 | 179 |
| | d1 | 5 | | | | | 7 | | | | | |
| | d2 | 20 | | | | | 23 | | | | | |
| Mould | LA1 | 69.15 | 79.17 | 99.21 | 119.25 | 139.29 | 79.17 | 99.21 | 119.25 | 139.29 | 159.33 | 179.37 |
| | L2a | 2 | | | | | 2.5 | | | | | |
| | L3 | 8.5 | | | | | 8.5 | | | | | |
| | D1a | 10 | | | | | 12 | | | | | |
| | D2 | 8 | | | | | 9 | | | | | |
| | D3 | 2≥0.6 | | | | | 3≥0.8 | | | | | |
| | D4 | 23 | | | | | 27 | | | | | |
| | H | 0.2 | | | | | 0.2 | | | | | |

# → A3 NOX Spare Parts

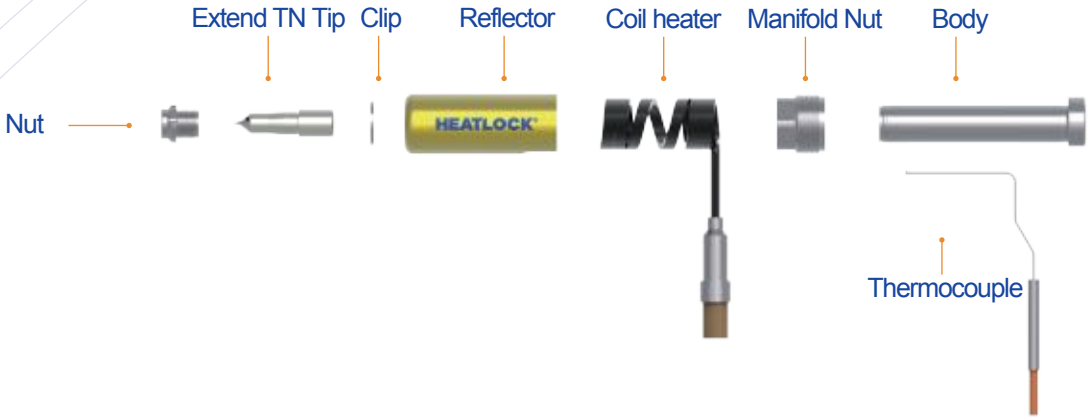


## Nozzle body spare parts list

| Size | Nozzle LA | Body | Coilheater | Thermocouple | Reflector | Manifold Nut | Spring Clip |
|---|---|---|---|---|---|---|---|
| 05 | 69 | A3BD106405 | CS14120430200 | TC00140200 | GRFT120120-064 | A3KG2016 | F-S-SPRINGCLIP-1210 |
| | 79 | A3BD107405 | CS14120530225 | TC00140210 | GRFT120120-074 | | |
| | 99 | A3BD109405 | CS14120730250 | TC00140220 | GRFT120120-094 | | |
| | 119 | A3BD111405 | CS14120930350 | TC00140220 | GRFT120120-114 | | |
| | 139 | A3BD113405 | CS14121130350 | TC00140250 | GRFT120120-134 | | |
| 07 | 79 | A3BD207407 | CS14150510300 | TC00140200 | GRFT224200-074 | A3KG2416 | F-S-SPRINGCLIP-1410 |
| | 99 | A3BD209407 | CS14150710350 | TC00140210 | GRFT224200-094 | | |
| | 119 | A3BD211407 | CS14150910450 | TC00140220 | GRFT224200-114 | | |
| | 139 | A3BD213407 | CS14151110450 | TC00140230 | GRFT224200-134 | | |
| | 159 | A3BD215407 | CS14151310500 | TC00140250 | GRFT224200-154 | | |
| | 179 | A3BD217407 | CS14151510550 | TC00140250 | GRFT224200-174 | | |

## Front Assembly Spare Parts

| Item code | Size 05 | | Item code | Size 07 | |
|---|---|---|---|---|---|
| | Nut | Tip | | Nut | Tip |
| A3NOX110101-1 | A3OS11010 | A3TN109331-1 | A3NOX212121-1 | A3OS21212 | A3TN211401-1 |
| A3NOX110101-3 | | A3TN109331-3 | A3NOX212121-3 | | A3TN211401-3 |

# ➔ A3 Special Hot Runner Solutions

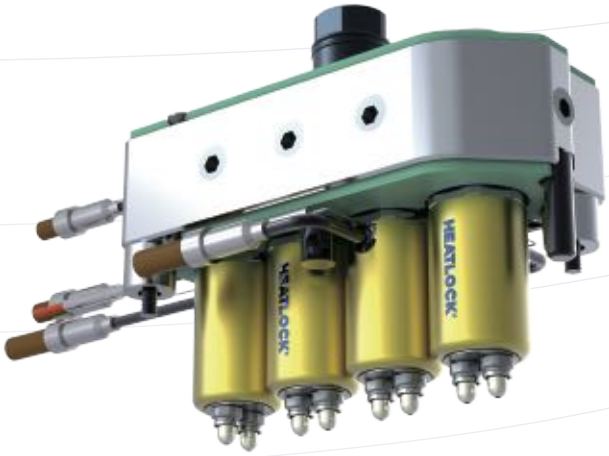


### A3 All in one MT (multi tip) nozzles

Small gate pitch, 4 in-line balanced system for vertical injection
moulding machines, 2 components moulding. Material TPE white

Pitch between tips: 10mm
Pitch between nozzles: 29mm
Manifold size: 141x61,5x35

### A3 All in one TP nozzle compact mini

Compact system 3 in-line balanced system for vertical injection
moulding machines, 2 components moulding. Material TPE white

Pitch between nozzles: 40,5mm
Manifold size: 128x46x30

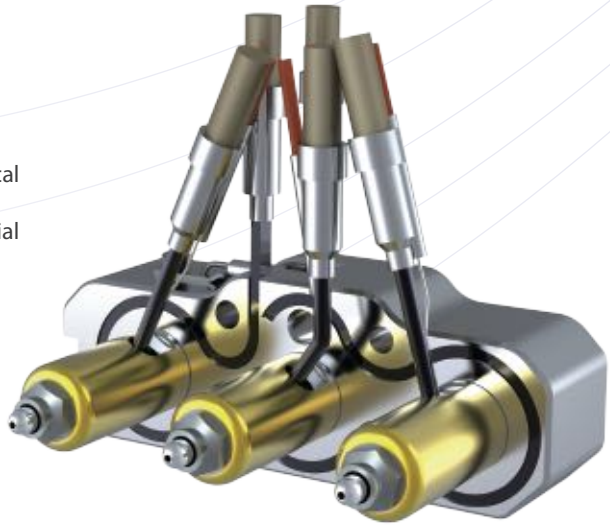

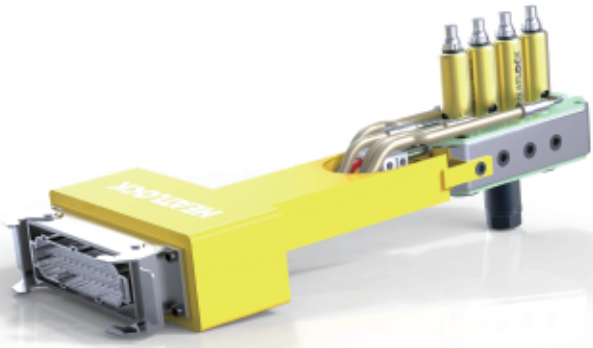


### A3 pre-wired system

Plug and play solution ready out of the box just to drop in to your mould.
All wires are bundled in a cable duct fitted with a connector, wired to your specifications

# ➔ A3 Special Hot Runner Solutions

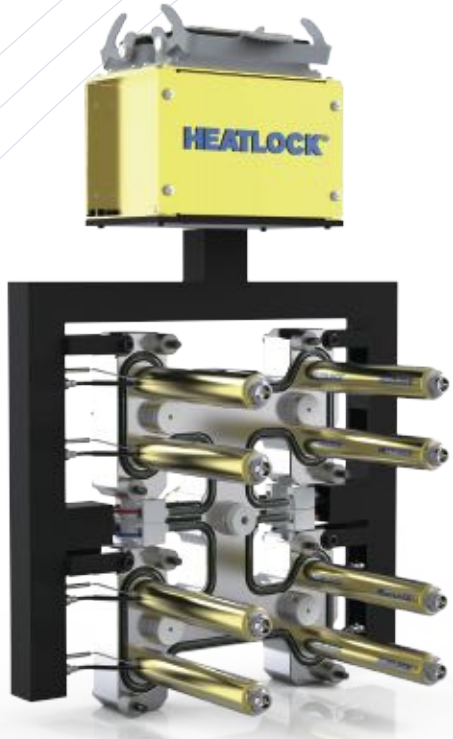


## A3 Pre-Wired perfection

Assemble and pre-wired hot runner system with cable duct.Easy to fit to your mould.

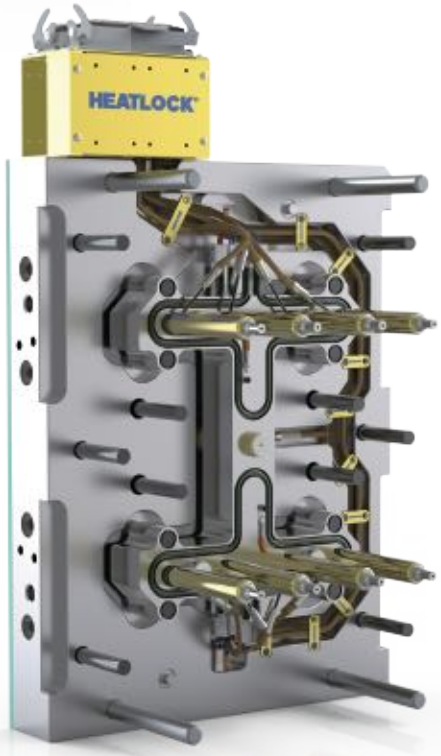


## A3 Fast Half perfection

Our fast and simple Hot Runner solution, all assemble and pre-wired to the Fast Half plate. Easy to fit to your mould and remove when moulds needs to be serviced.

# ➔ A3 Special Hot Runner Solutions

## Hot Half perfection

Fully assembled and test Hot Half designed for longevity. Easy to install and service, for all kind of mould base standards.No compromise design standard.

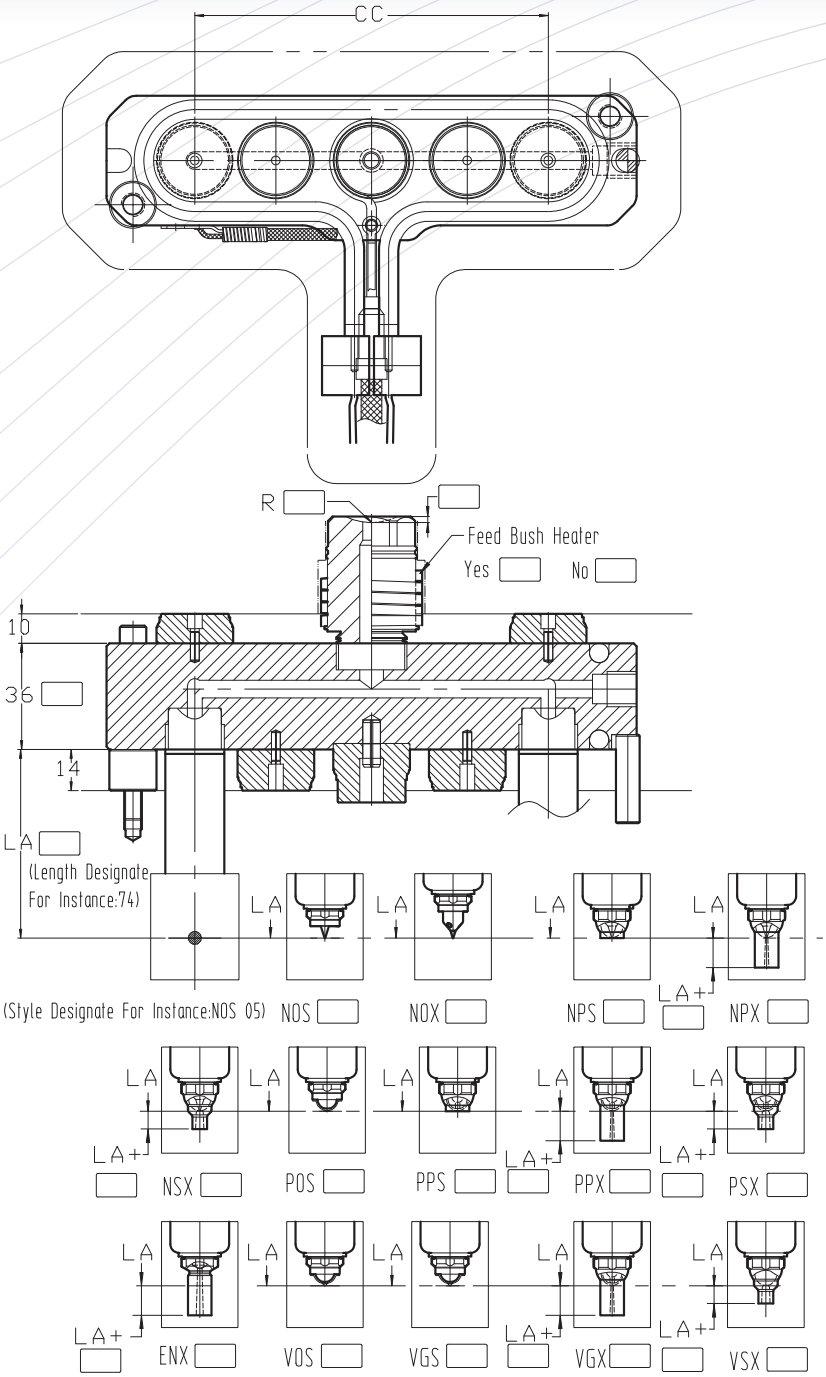


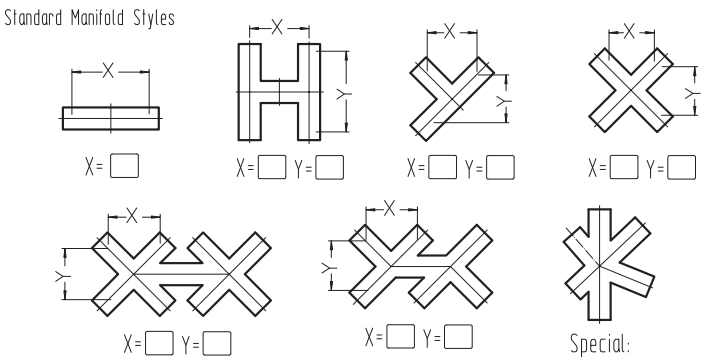


**Please provide the following information:**

| | |
|---|---|
| **Customer Quote NO.:** | |
| **Company:** | |
| **Contact:** | **Date:** |
| **Address:** | |
| **Tel:** | |
| **Fax:** | |
| **E-mail:** | |
| **Product Description:** | |
| **Material:** | **Glass Filled:** % |
| | **Frame Retardant:** |
| **Per Product Weight:** | |
| **NO. of Cavities:** | |
| **NO. of Gates Per Product:** | |
| **Wall Thickness:** | |
| **Remarks:** | |

**Order example: H6080-94+10NPX1-305-R19D5H**

| Manifold | | | | Nozzle | | | | | | | | Feed bush | | |
|---|---|---|---|---|---|---|---|---|---|---|---|---|---|---|
| Type | X | Y | — | LA | LA+ | Front type | Tip material | | Exits in tip | Runner | — | R | D | Heater |
| H | 60 | 80 | - | 94 | 10 | NPX | 1 | - | 3 | 05 | - | R19 | D5 | H |

HEATLOCK®

**Hong Kong:**
**Heatlock Co Ltd**
Witty Commercial Building, 9-FL, Room 12/F,
1A-1L Tung Choi Street, Mong Kok, KLN, Hong Kong
ph: +852 8120 5469

**China PRC:**
Ramada Plaza, Room 1108, Building 1, Beijiao Town
Shunde District, Foshan City, Guangdong, PRC
Postal code: 528311
ph: +86 757 2991 5868
fx: +86 757 2991 5860

**Order & info:**
frontdesk@heatlock.com

To find one of our dedicated Heatlock technology or service centres please visit our website **www.heatlock.com**

Heatlock © 04/2020. All right reserved.